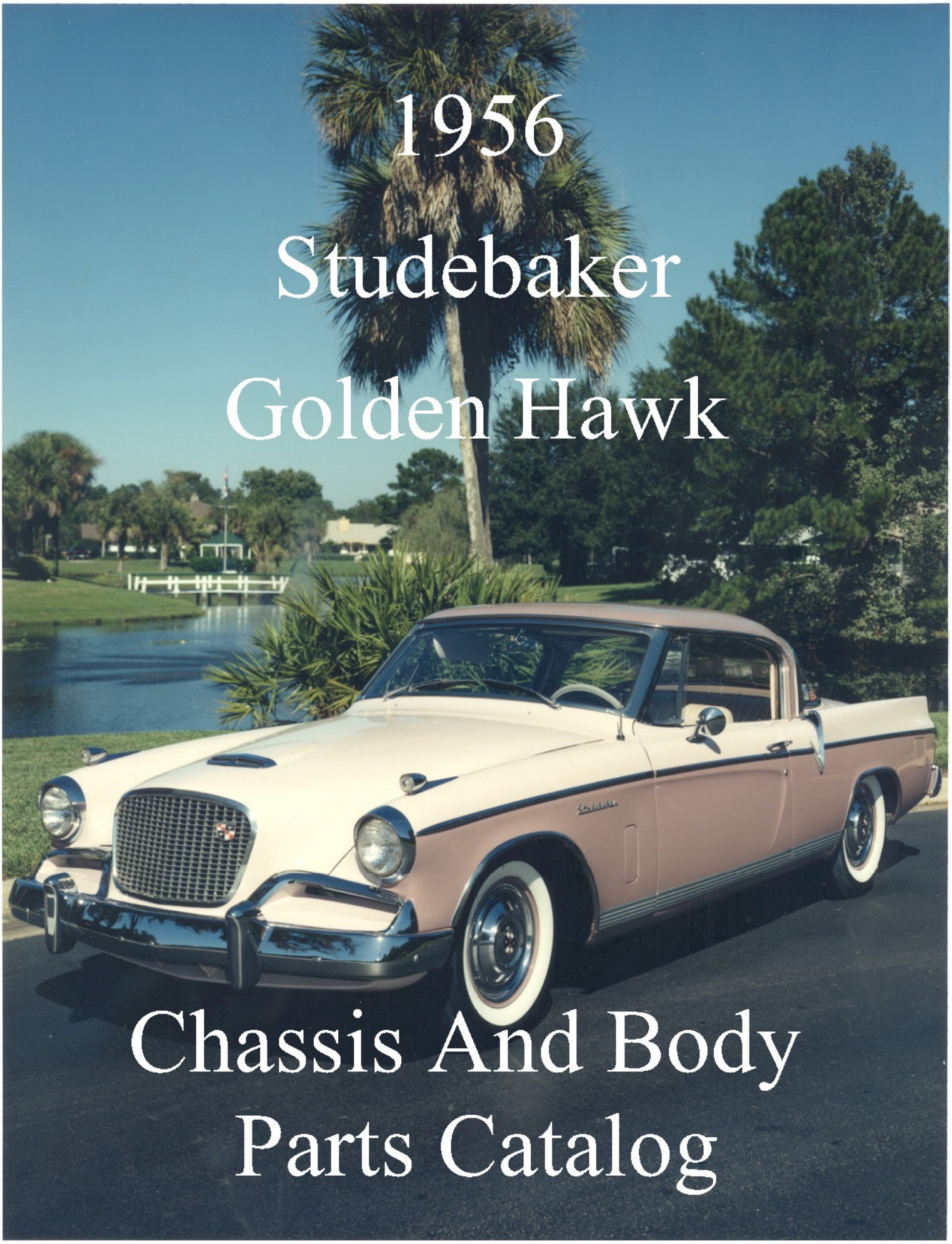

1956 Studebaker Golden Hawk

Chassis And Body Parts Catalog

1956 STUDEBAKER GOLDEN HAWK
OWNERS REGISTER

1956 STUDEBAKER GOLDEN HAWK
OWNERS REGISTER

S·P
SUPERIOR
PERFORMANCE
Guaranteed

1956 STUDEBAKER GOLDEN HAWK
OWNERS REGISTER

1956 STUDEBAKER GOLDEN HAWK
OWNERS REGISTER

1956 Studebaker

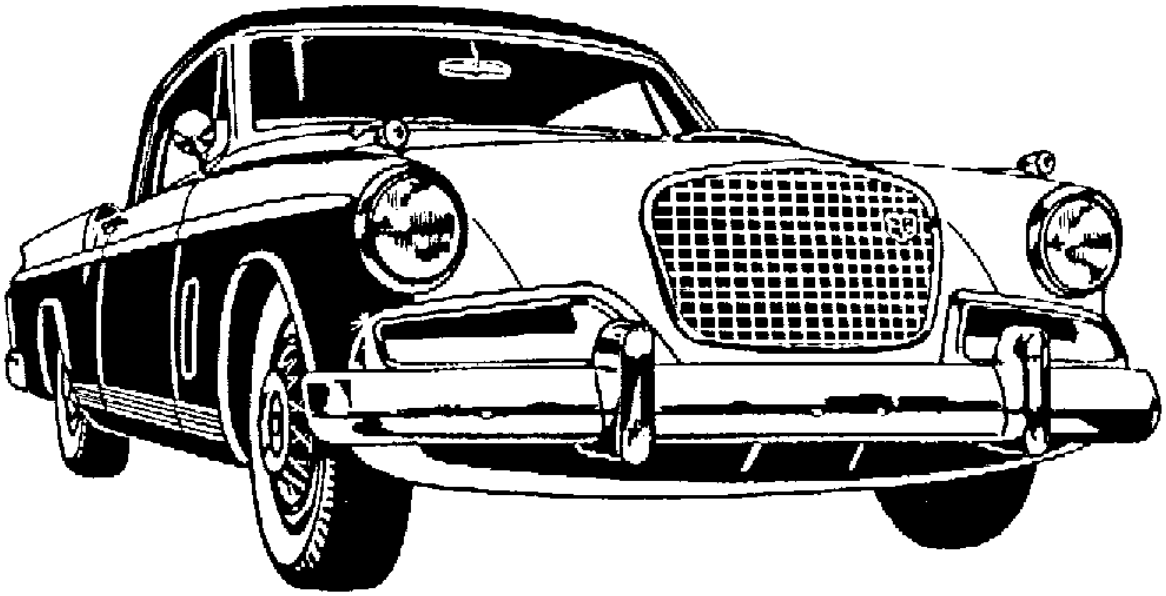

Golden Hawk

Chassis and Body

Parts Catalog

S·P
SUPERIOR PERFORMANCE
Guaranteed

THE 1956 STUDEBAKER

GOLDEN HAWK

PARTS CATALOG

PRODUCED AND COPYRIGHTED BY

FRANK J. AMBROGIO

JANUARY, 1994

MARCH, 2021

STUDEBAKER

1956 SERIES

GOLDEN HAWK

PARTS

CATALOG

IMPORTANT

The information in this catalog was compiled from the **1955 - 1958 Studebaker Chassis Parts Catalog (Revised Jan., 1961)** the **1953 - 1958 Studebaker Body Parts Catalog (April 1958),** and the **1956 Studebaker Shop Manual.** The purpose of this catalog is to list only those part numbers and descriptions which pertain to the **1956 Studebaker Golden Hawk (56J).**

This catalog is not meant to replace the Studebaker parts/shop catalogs and there will be instances where it will be necessary to reference those catalogs.

No liability is assumed with respect to the use of the information herein.

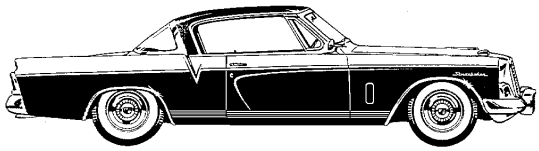

Original Printing January, 1994
Second Printing March 2021

INDEXES	GROUP	PAGE
MAJOR GROUPS and ILLUSTRATIONS		VII
ALPHABETICAL		XVII
SPECIFICATIONS		XXXIII
ACCESSORIES	AC	1
ENGINE	01	11
CLUTCH PEDAL and TORQUE CONVERTER	02	27
FUEL SYSTEM	03	33
EXHAUST	04	45
COOLING	05	49
ELECTRICAL	06	53
TRANSMISSION (Std. and O.D.)	07	77
TRANSMISSION (Ultramatic)	08	89
PROPELLER SHAFT	09	107
REAR AXLE	10	111
BRAKES	11	115
FRONT SUSPENSION	12	137
STEERING-STANDARD	13A	145
STEERING-POWER	13B	151
WHEELS	14	163
FRAME and SPRINGS	15	167
FENDERS, HOOD, MISC. SHEET METAL	16	173
SPEEDOMETER and INSTRUMENTS	17	181
SHOCK ABSORBERS, BUMPERS and GUARDS	18	187

Copyright© 1994 by Frank J. Ambrogio

Printed in U.S.A.

INTRODUCTION

The 1956 Studebaker Golden Hawk Parts Catalog

MODEL 56J

An effort of approximately four years went into the production of this catalog and, to the best of my knowledge, it is the first ever parts catalog designed for one specific model of car produced by the *Studebaker Packard Corporation*.

The seed for this project was planted while searching through the Studebaker Body and Chassis parts catalogs for various parts for my own 1956 Studebaker Golden Hawk. Often there was much confusion as to which of the parts listed was the correct one for my car. On more than one occasion, I thought that it would certainly be nice to have a catalog of parts which was designed specifically for my car.

In January, 1989, I started the *1956 Studebaker Golden Hawk Owners Register*. The idea was to track the remaining 1956 Studebaker Golden Hawks (model 56J) and to produce a newsletter, *56J ONLY,* for the owners as a vehicle for sharing information. The success of that endeavor led me to embark on this catalog project about a year later.

I would have to say that many times during the past four years I recalled the saying which went something like "the longest journey begins with the first step". In this case, that first step began with the section on brakes (Group 11 in the Chassis Parts Catalog). I plodded through this section and when I finished, I thought, if I can do one group, I can do them all. Since I had no deadline, I simply did what I could, when I could and eventually (4 years later), I had done them all.

Using a personal computer and word processor, I typed in virtually every character, which unfortunately left much room for error. Although the data entry was a formidable exercise, proofing the material was equally as difficult and time consuming. I found numerous mistakes and, as with the original catalogs, some mistakes probably remain. With about 70,000 words and spaces entered, even a 99.9% accuracy rate would leave 70 errors.

The black and white cover, showing a 3/4 front view of a 1956 Golden Hawk, features a computerized representation of original Studebaker artwork. Using a scanner, I transferred the artwork to a computer disk and then (in technical terms), I *plopped* it on the page.

Special thanks go to my wife *Anita* who helped me cross check part numbers and illustrations, proof read the material for spelling and text errors, *and never once told me I was crazy*. This updated version from 2021 is basically the same as the 1994 version, with a better font. I also did some streamlining and eliminated some blank pages.

Other than a few notes of clarification which are in *italics*, this is the last contact you will have with me while you use this catalog.

From this point on, it is strictly ***56J ONLY***.

Frank J. Ambrogio

Cover car - Serial # 6032195

INTRODUCTION

NOTICE

This **1956 STUDEBAKER GOLDEN HAWK PARTS CATALOG** was compiled from information contained in the *1955 - 1958 STUDEBAKER CHASSIS PARTS CATALOG (Revised Jan., 1961), the 1953 - 1958 BODY PARTS CATALOG (April 1958),* and a few items from the *STUDEBAKER 1956 Passenger Car SHOP MANUAL.* Only those items pertaining to the 1956 Studebaker Golden Hawk were extracted from the above catalogs and entered herein. Although this catalog is intended to show all part # identification for the 1956 Studebaker Golden Hawk, there will be instances when reference to the other catalogs will be necessary. This catalog does not indicate what other models use like parts.

The user of this catalog assumes all responsibility for insuring that all part numbers are correct. There was much ambiguity in the original catalogs and every effort was made to insure that the correct part numbers, notes, and plates were used in developing this catalog. Discrepancies are noted in *italics*.

ARRANGEMENT

The same major groups, such as "Engine, Clutch, Transmission," etc. and sub-groups such as "Engine mounting", "Cylinder block, Head and Gaskets," etc. as used in the above catalogs, were used in this catalog.

DEFINITION OF LOCATIONAL TERMS

All parts having the same function, but which are not interchangeable, are designated by right, left, upper, lower, front or rear in regard to the location when viewed from the rear facing forward: in other words as the part is viewed when one is seated facing forward in the vehicle.

Parts used only on right hand drive or left hand drive cars are indicated by 'RHC," or "LHC," all other parts not so marked are used on both right or left hand drive vehicles.

COMPONENTS OF KITS, SETS AND ASSEMBLIES

Components of Kits, Sets and Assemblies are listed in detail and when such components are also available separately, a note is added indicating the set or kit of which the particular item is a component.

ATTACHING PARTS

Attaching parts such as bolts, nuts, rivets, screws and washers, etc., are indented immediately following the part or parts with which they are used. Whenever two similar parts having the same attaching parts, such as right and left brackets are listed, they are placed immediately following one another and the attaching parts for both are covered by a single listing immediately thereafter. The quantities shown are the attaching parts necessary for both.

ILLUSTRATIONS

Illustrations in this parts catalog are shown at the beginning of each major group or in the text immediately following the group or sub-group heading.

Assembly views, exploded views and cross sectional drawings are used to aid in location and identification of parts.

These illustrations show the typical construction of the various assemblies and component parts and may not, in all cases, show the exact detail of each of the parts of the same general character.

Each illustration is given a specific illustration number in order to facilitate its quick location on the plate or text page and enables a quick determination of part number.

Each illustration is a combination of group number, sub-group number and specific item number.

The plate number is also a combination number indicating the group number and specific plate.

INTRODUCTION

For example, Illustration No. 0102-1 on plate 01-4 indicates that the part is listed in Group 01. Sub-group 0102 and is the CYLINDER BLOCK indicated by Illust. No. 0102-1.

INDEXES

The INDEX OF MAJOR GROUPS, SUB-GROUPS and ILLUSTRATIONS is at the front of the book.
The ALPHABETICAL INDEX of all parts with the exception of indented items is at the front of the book.
The NUMERICAL INDEX of all parts is located at the back of the book.

LISTS

A parts INFORMATION and TORQUE SPECIFICATIONS list, taken from the Shop Manual is located at the front of the book.
A list of Studebaker SERVICE BULLETINS is located at the back of the book.
A list of Utility Items showing all the little nuts and bolts whose part numbers begin with "g" is located at the back of the book.
A list of ACCESSORY CODES showing many items which were not in the original catalogs is located at the back of the book.

HOW TO IDENTIFY PARTS LISTED IN THIS CATALOG

There are several ways to identify any parts quickly, using the various indexes.

The following instructions and examples are given as a guide.

1. If only the description of the parts is known:
   A. Turn to the alphabetical index and locate item by the noun name.
   B. Turn to the group and sub-group shown opposite the noun name and determine the part number for the particular model.

2. If only the function of the part in the vehicle is known:
   A. Turn to the index of major qroups and sub-groups and determine the number of the group in which the part is most likely to be listed. (Example - A dome lamp would be in hard top bodies - 23 sub-group 2351.)
   B. Review the illustrations which apply to the major qroup or allied groups. When the proper illustration is found, using the illustration number, turn to the proper group and determine the part number.

3. If only the part number is known and it is desired to ascertain a complete description of the part:
   A. Refer to the numerical index and establish the group in which the part is listed.
   B. Turn to the group shown opposite the part number and locate the part number and a complete description is available.

FINISH SYMBOLS

Letter symbol suffix codes on part numbers denote the finish as follows:
A - Nickel Plate P - Prime VP - Gold and Paint
B - Black Enamel or Japan T - Trim as per specifications W - Chrome Plate
J - Silver Plate V - Gold Plate WP - Chrome and Paint

LOCATION OF CAR SERIAL, ENGINE AND BODY NUMBERS

CAR SERIAL NUMBER PLATE Left front door hinge pillar.
ENGINE NUMBER Stamped on boss at the top side, front end of cyl. block, next to oil filler tube.
MODEL SYMBOL and BODY NUMBER PLATE - This plate is on the engine side of firewall and shows car model, body symbol and body number.

INTRODUCTION

CAR MODEL IDENTIFICATION

MODEL SYMBOL	YEAR AND MODEL	START/END CAR SERIAL #S SOUTH BEND	LOS ANGELES	STARTING ENGINE NO.	CU. IN.	HP A.M.A. R.A.C. RATE
56J	1956 GOLDEN HAWK	6030001	6800001	S-1001 w/AD.	352"	51.2
		6033472	6800601	K-1001 w/OD.		

BODY SYMBOL

	SYMBOL	TYPE	REMARKS
K	HARD TOP HAWK	K7	HAWK 56J

INTRODUCTION

LIST OF ABBREVIATIONS

A.C. . . . . Air Conditioning
AD. . . . . Automatic drive
Adj. . . . . Adjusting
Alum. . . . . Aluminum
Assy. . . . . Assembly
Aux. . . . . Auxiliary
Brg. . . . . Bearing
Brkt. . . . . Bracket
Carb. . . . . Carburetor
Cop. Asb. . . . . Copper Asbestos
Cyl. . . . . Cylinder
Dia. . . . . Diameter
Diff. . . . . Differential
Eng. . . . . Engine
Eq. . . . . Equipment
Exh. . . . . Exhaust
HD. . . . . Heavy duty
Hex. . . . . Hexagon
H.C. . . . . High Compression
Illust. . . . . Illustrated
. . . . . Illustration
Incl. . . . . Included
. . . . . Includes
Inl. . . . . Inlet
I.D. . . . . Inside Diameter
LHC . . . . . Left Hand Drive
L.A. . . . . Los Angeles
M/C . . . . . Master Cylinder
NSS . . . . . Not Sold Separately
O.D. . . . . Outside Diameter
OD. . . . . Overdrive
Oper. . . . . Operating
OS. . . . . Oversize
Pass. . . . . Passenger
P.B. . . . . Power Brakes
Prop. . . . . Propeller
P.S. . . . . Power Steering
Rr. . . . . Rear
R/A . . . . . Rear Axle
Ret. . . . . Retainer
RHC . . . . . Right Hand Drive
Spec. . . . . Special
Steer. . . . . Steering
ST. . . . . Standard Transmission
Std. . . . . Standard
Supt. . . . . Support
Trans. . . . . Transmission
Univ. . . . . Universal
US. . . . . Undersize
Vac. . . . . Vacuum
W/ . . . . . With
W.B. . . . . Wheelbase
W/S . . . . . Windshield

INDEX OF MAJOR GROUPS AND SUBGROUPS
ALSO QUICK REFERENCE INDEX OF ILLUSTRATIONS

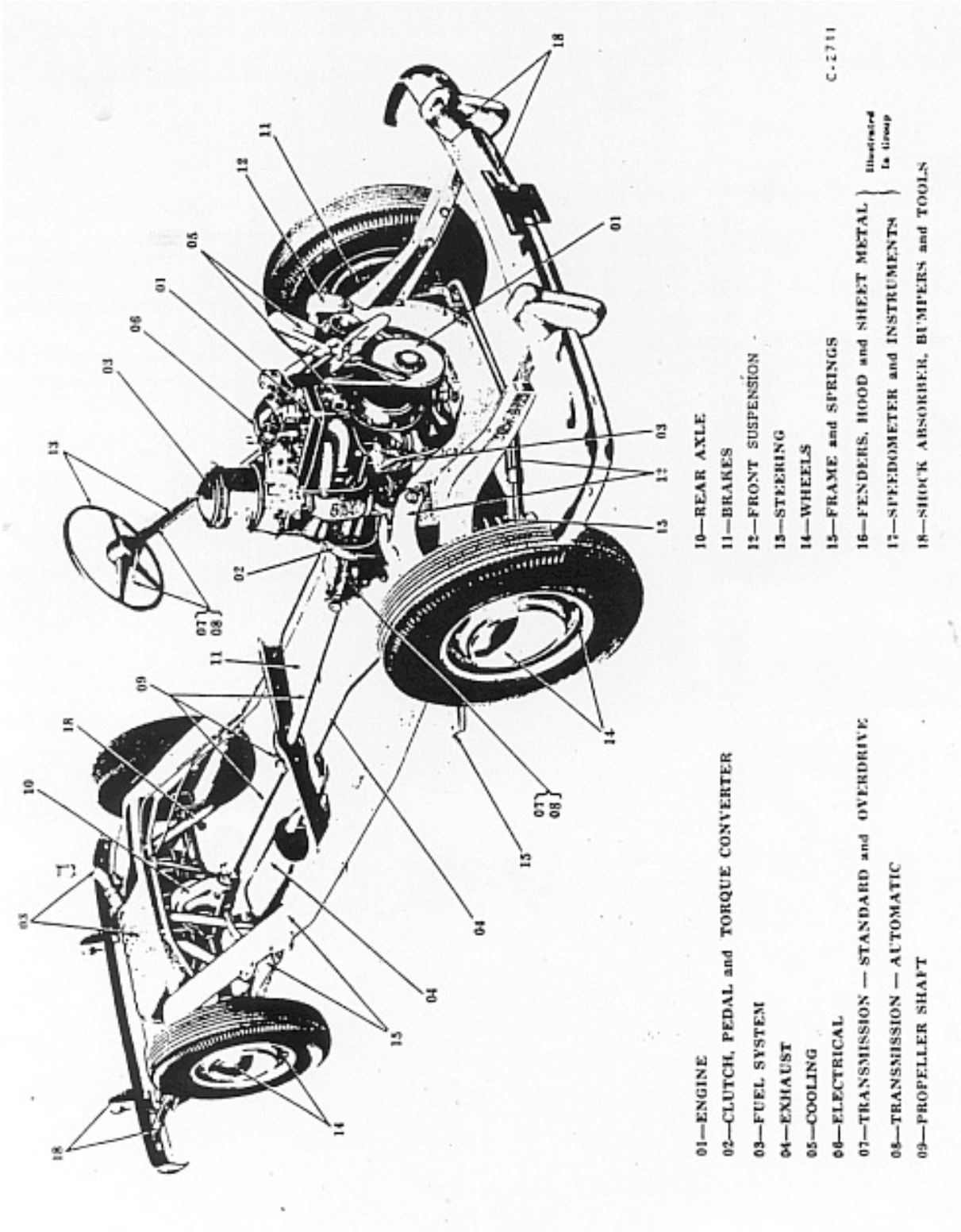

INDEX OF MAJOR GROUPS AND SUBGROUPS
ALSO QUICK REFERENCE INDEX OF ILLUSTRATIONS

ALPHABETICAL INDEX XVII

SPECIFICATIONS XXX
BODY XXX
BRAKE SYSTEM XXX
CLIMATIZER, DEFROSTER XXX
CLUTCH XXX
COOLING SYSTEM XXXI
ELECTRICAL SYSTEM XXXI
ENGINE - SKYPOWER 352 XXXIII
FRONT SUSPENSION XXXVI
STEERING SYSTEM XXXVII
GASOLINE SYSTEM XXXVII
LUBRICATION XXXVII
PROPELLER SHAFT AND UNIVERSAL JOINTS XXXVII
REAR AXLE XXXVII
SPRINGS AND SHOCK ABSORBERS XXXVIII
TRANSMISSION XXXVIII
WHEELS AND TIRES XLI

ACCESSORIES 1
CLIMATIZER and DEFROSTER Plate AC-1 1
AC1 - A - CLIMATIZER 2
CLIMATIZER AND DEFROSTER HOSE CLAMP 2
CLIMATIZER CONTROL SWITCH 3
AC1 - B - Windshield Defroster 3
AC12 - RADIO AND ANTENNA 4
AC12 - A - Radio and Components 4
AC12 - B - Rear Seat Speaker 4
AC12 - C Radio Antenna 5
AC13 - INSTRUMENT BOARD ACCESSORIES 6
GLOVE COMPARTMENT LIGHT 6
AC13 - A - Compartment Light 6
AC13 - B - Kleenex Dispenser 6
AC14 - CIGAR LIGHTER 6
CIGAR LIGHTER COMPLETE 6
AC16 - DOOR EDGE GUARD 7
AC27 - SEAT SAFETY BELT 7
AC30 - TRUNK LIGHT AND DECK LID NAME PLATE 7
AC41 - AUXILIARY FLOOR MATS 7
AC45 - REAR VIEW MIRRORS 7
AC47 - WINDSHIELD VISOR 8
AC49 - WINDSHIELD WASHER 8
WASHER KIT, windshield - LHC 8

ENGINE 10
ENGINE, RIGHT VIEW - Model 56J Plate 01-4 10
ENGINE, EXTERNAL PARTS - Model 56J Plate 01-9 11
ENGINE, INTERNAL PARTS - Model 56J Plate 01-10 12
MANIFOLDS & HEATER VALVE - Model 56J Plate 01-12 13
OIL PUMPS - Model 56J Plate 01-13 14
0100 - ENGINE ASSEMBLY 15
STRIPPED ENGINE 15
0101 - ENGINE MOUNTINGS 15
0102 - CYLINDER BLOCK, HEAD AND GASKET 16

INDEX OF MAJOR GROUPS AND SUBGROUPS
ALSO QUICK REFERENCE INDEX OF ILLUSTRATIONS

0103 - VALVES AND VALVE MECHANISM 17
0104 - CAMSHAFT AND BEARINGS, GEAR AND COVER 18
0105 - CRANKSHAFT, BEARINGS, CAPS, GEAR AND DAMPER. 18
0106 - FLYWHEEL AND STARTER GEAR 19
0107 - CONNECTING RODS AND BEARINGS. 19
0108 - PISTONS, PINS AND RINGS 20
0109 - INLET AND EXHAUST MANIFOLDS AND HEAT CONTROL 20
0115 - OIL PAN, GASKETS, FILLER AND LEVEL GAGE. 21
Oil Level Gage and Tube 22
0116 - OIL PUMP, STRAINER AND PRESSURE GAGE PIPES. 22
0117 - OIL PRESSURE RELIEF VALVE 23
0118 - OIL FILTER AND PIPES 23
Oil Filter Cartridge - Replaceable Cartridge Type 23

CLUTCH, PEDAL AND TORQUE CONVERTER 24
CLUTCH, PEDAL AND RELEASE MECHANISM - Model 56J Plate 02-2 24
TORQUE CONVERTER - Model 56J Plate 02-4. 25
0201 - CLUTCH DRIVEN PLATE AND FACINGS 26
0202 - CLUTCH COVER AND PRESSURE PLATE 26
0203 - CLUTCH RELEASE BEARING, SHAFT AND LEVERS 26
0204 - CLUTCH PEDAL AND SPRING 26
0205 - CLUTCH PEDAL SHAFT 26
0206 - CLUTCH OPERATING SHAFT AND RODS. 27
0207 - CLUTCH PILOT BEARING 27
0209 - CLUTCH AND FLYWHEEL HOUSING. 27
0220 - TORQUE CONVERTER 27
0225 - TORQUE CONVERTER PARTS 27
0230 - TORQUE CONVERTER HOUSING 29

FUEL SYSTEM 30
FUEL SYSTEM - Model 56J Plate 03-2. 30
FUEL PUMP - Model 56J Plate 03-4 31
ACCELERATOR CONTROLS - Model 56J Plate 03-12. 32
0301 - FUEL PUMP 33
0302 - CARBURETOR AND AUTOMATIC CHOKE. 34
Automatic Choke Pipes and Fittings 34
CARBURETOR - CARTER MODEL 2394S (4 BARREL) 35
0303 - CARBURETOR AIR CLEANER 38
0304 - FUEL FILTER 38
0307 - GASOLINE TANK, GAGE AND MOUNTINGS 38
0308 - FUEL (GASOLINE) LINES AND CONNECTIONS 39
0312 - ACCELERATOR AND THROTTLE CONTROLS 40
ACCELERATOR PEDAL 40

DUAL EXHAUST SYSTEM. 42
DUAL EXHAUST SYSTEM - Model 56J Plate 04-6 42
0401 - EXHAUST PIPE AND SUPPORTS. 43
0402 - MUFFLER 43
0403 - OUTLET PIPE AND SUPPORTS 43
OUTLET (TAIL) PIPE. 43

COOLING 45
RADIATOR, FAN and WATER PUMP - Model 56J Plate 05-3 45
RADIATOR GRILLE - Model 56J Plate 05-6 46
0501 - RADIATOR CORE AND FILLER CAP 47
0502 - RADIATOR GRILLE 47

INDEX OF MAJOR GROUPS AND SUBGROUPS
ALSO QUICK REFERENCE INDEX OF ILLUSTRATIONS

0503 - RADIATOR MOUNTINGS . . . 47
0504 - THERMOSTAT . . . 47
0505 - WATER PUMP . . . 47
0506 - FAN AND BELT . . . 48
0507 - RADIATOR AND WATER PUMP HOSE AND CONNECTIONS . . . 48

ELECTRICAL . . . 49
ELECTRICAL SYSTEM - Model 56J Plate 06-3 . . . 49
DISTRIBUTOR - Model 56J Plate 06-5 . . . 50
STARTER MOTOR - Model 56J Plate 06-9 . . . 51
GENERATOR Plate 06-11 . . . 52
HEAD LAMP (SINGLE UNIT) Plate 06-15 . . . 53
FENDER PARKING AND DIRECTIONAL LAMP Plate 06-18 . . . 54
TAIL LAMPS Plate 06-19 . . . 55
DIRECTIONAL SIGNALS Plate 06-25 . . . 56
0601 - IGNITION DISTRIBUTOR, CONDENSER AND SPARK ADVANCE MODIFIER . . . 57
DISTRIBUTOR ADAPTER PLATE . . . 58
0602 - IGNITION COIL, SWITCH AND LOCK . . . 59
0603 - SPARK PLUG AND DISTRIBUTOR CABLES . . . 59
0606 - STARTER MOTOR . . . 60
0607 - STARTER SWITCH . . . 60
0608 - GENERATOR AND REGULATOR . . . 60
0610 - STORAGE BATTERY . . . 62
BATTERY HOLD DOWN RIM . . . 62
0615 - LIGHT SWITCHES - LIGHTING, INSTRUMENTS, FOOT DIMMER AND STOP LAMP . . . 62
0617 - HEAD AND PARKING LAMPS . . . 63
0618 - FENDER PARKING LAMP . . . 63
0619 - TAIL AND STOP LAMP . . . 64
TAIL LAMP SOCKET AND CABLES . . . 64
0620 - LICENSE PLATE LAMP . . . 64
LICENSE PLATE LAMP . . . 65
0621 - DIRECTIONAL LAMPS . . . 65
0622 - LICENSE PLATE BRACKETS . . . 66
0625 - HORN . . . 66
HORN BRACKET . . . 67
0627 - CHASSIS WIRING, JUNCTION BLOCK, CIRCUIT BREAKER . . . 67
0630 - BATTERY AND STARTING CABLES AND GROUND STRAPS . . . 68
BACK-UP LAMPS Plate 06-26 . . . 69
0632 - BACK-UP LAMP . . . 69
SPOTLIGHT ASSEMBLY Plate 06-33 . . . 70
0633 - SPOTLIGHT . . . 70

TRANSMISSION - STANDARD AND OVERDRIVE . . . 71
TRANSMISSION (Trans. Model T85) Plate 07-3 . . . 71
OVERDRIVE (trans. Model T85) Plate 07-4 . . . 72
OVERDRIVE CUT-OUT CONTROLS Plate 07-6 . . . 73
STEERING POST GEARSHIFT Plate 07-8 . . . 74
TRANSMISSION CASE IDENTIFICATION PLATE . . . 75
0700 - TRANSMISSION ASSEMBLY . . . 75
0701 - TRANSMISSION CASE . . . 76
0702 - TRANSMISSION MAIN SHAFT, GEARS AND BEARINGS . . . 76
0703 - TRANSMISSION COUNTERSHAFT, GEARS AND BEARINGS . . . 77
0704 - TRANSMISSION REVERSE IDLER GEAR AND SHAFT . . . 77
0705 - TRANSMISSION MAIN DRIVE, PINION AND BEARINGS . . . 77
0720 - OVERDRIVE HOUSING . . . 77
0721 - OVERDRIVE SHAFT AND BEARING . . . 77

INDEX OF MAJOR GROUPS AND SUBGROUPS
ALSO QUICK REFERENCE INDEX OF ILLUSTRATIONS

0722 - OVERDRIVE FREE WHEELING (FW) CAM 78
0725 - OVERDRIVE SHIFT 78
0728 - OVERDRIVE PINION CAGE. 78
0729 - OVERDRIVE STATIONARY OR SUN GEAR 78
0731 - OVERDRIVE CUT-OUT CONTROL 78
OVERDRIVE COVER W/GASKET - CONTROL GOVERNOR 80
0732 - OVERDRIVE CONTROL - ON DASH. 80
0745 - TRANSMISSION UNIVERSAL JOINT FLANGE. 81
0747 - GEARSHIFT FORKS AND LEVERS. 81
0756 - GEARSHIFT HAND LEVER AND SHAFT 81
0759 - GEARSHIFT CROSS SHIFT. 82
0760 - GEARSHIFT RODS 82

TRANSMISSION - ULTRAMATIC. 83
TRANS. CASE, CONVERTER HOUSING AND OIL COOLER PIPES Plate 08-9. 83
FRONT OIL PUMP, CLUTCH, INPUT SHAFT ETC. Plate 08-10 84
REAR OIL PUMP, OUTPUT SHAFT, PLANETARY SHAFT AND GEARS, GOVERNOR ETC. Plate 08-11 . . 85
TRANSMISSION CONTROLS (BOTTOM VIEW) Plate 08-12 86
CONTROL VALVE MANIFOLD AND UPPER REAR CONTROL Plate 08-13. 87
FRONT CONTROL AND LOW BRAKE Plate 08-14 88
LOWER REAR CONTROL, REVERSE BRAKE, TRANS SHIFT AND THROTTLE CONTROLS Plate 08-15 89
HAND CONTROL Plate 08-16 90
0800B - ULTRAMATIC TRANSMISSION. 91
0811B - TRANSMISSION CASE 91
0814B - TRANSMISSION INPUT and OUTPUT SHAFT 91
0817B - TRANSMISSION PLANETARY SHAFT, GEARS, ETC.. 92
0820B - TRANSMISSION CLUTCH 92
0823B - FRONT PUMP 93
0824B - REAR PUMP. 93
0827B - SERVO UNITS 94
0828B - SERVO BANDS 94
0830B - TRANSMISSION GOVERNOR. 95
0832B - CONTROL VALVE 95
0837B - TRANSMISSION PARKING GEAR 97
0841B - TRANSMISSION OIL COOLER 97
0847B - TRANSMISSION UNIVERSAL JOINT FLANGE 98
0853B - HAND CONTROL STARTER CUT-OUT AND BACK-UP LAMP SWITCH 98
0854B - HAND CONTROL RODS AND BELL CRANK 98

PROPELLER SHAFT 100
PROPELLER SHAFT, UNIVERSAL JOINTS AND SUPPORT Plate 09-1 100
0900 - PROPELLER SHAFT 101
Front shafts 101
Rear Shafts 101
0901 - UNIVERSAL JOINT. 102
Cross and Bearing Unit 102
0902 - PROPELLER SHAFT SUPPORT 102

REAR AXLE 103
REAR AXLE and DIFFERENTIAL Plate 10-2. 103
1000 - REAR AXLE ASSEMBLIES. 104
1001 - REAR AXLE HOUSING. 104
1002 - REAR AXLE SHAFT and BEARINGS. 104
1003 - DIFFERENTIAL CARRIER 104
1004 - DIFFERENTIAL CASE AND BEARINGS 105

INDEX OF MAJOR GROUPS AND SUBGROUPS
ALSO QUICK REFERENCE INDEX OF ILLUSTRATIONS

1005 - REAR AXLE BEVEL DRIVE GEAR, PINION and BEARINGS 105

1006 - REAR AXLE UNIVERSAL JOINT FLANGE 106

BRAKES 107
RIGHT FRONT BRAKE Plate 11-2. 107
TYPICAL BRAKE PEDAL, PIPES, HOSE and FITTINGS - For CARS With ST and OD Plate 11-3 108
TYPICAL BRAKE PEDAL, PIPES, HOSE and FITTINGS - For CARS WITH AD Plate 11-4 109
TYPICAL BRAKE PIPES, HOSE and FITTINGS Plate 11-7 110
TYPICAL BRAKE PIPES, HOSE and FITTINGS Plate 11-8 111
TYPICAL POWER BRAKE OR HYDROVAC UNIT Plate 11-9 112
HAND BRAKE Plate 11-10 113
1101 - WHEEL BRAKE SHOES, LININGS, ETC. 114
Brake Shoe and Linings 114
1102 - WHEEL BRAKE BACKING PLATES 115
1103 - WHEEL BRAKE CYLINDER 115
CYLINDER REPAIR KIT 116
1104 - MASTER CYLINDER (M/C) 116
MASTER CYLINDER COMPLETE 116
MASTER CYLINDER REPAIR KI 117
1105 - No 118
NoRol EQUIPMENT - LHC. 118
1106 - ANTI-CREEP SOLENOID VALVE SWITCH AND CABLE 119
1107 - BRAKE PIPES, HOSE AND FITTINGS 119
1108 - BRAKE PEDAL 121
1109 - BRAKE RODS 121
1110 - BRAKE CABLES 121
1112 - POWER BRAKE OR HYDROVAC UNIT, CHECK VALVE AND PIPES. 122
Control Valve, Diaphragm, Piston, Etc. 124
1116 - HAND OR PARKING BRAKE 126

FRONT SUSPENSION 127
STEERING KNUCKLE, CONTROL ARMS and KING PINS Plate 12-1 127
STEERING KNUCKLE, CONTROL ARMS STABILIZERS Plate 12-2 128
1205 - STEERING KNUCKLE CONTROL ARM STABILIZER. 128
STEERING LINKAGE Plate 12-3. 129
1202 - STEERING KNUCKLE AND ARM. 130
1203 - STEERING KNUCKLE KING PIN AND BEARINGS 130
KING PIN KIT 130
1204 - STEERING KNUCKLE CONTROL ARM 131
PIN and BUSHING KIT 131
BUMPER, upper control arm 132
1205 - STEERING KNUCKLE CONTROL ARM STABILIZER. 132
1207 - STEERING KNUCKLE TIE ROD AND ENDS. 133
1209 - STEERING BELL CRANK AND LEVER 133

STANDARD STEERING 134
STANDARD STEERING GEAR Plate 13-1 134
TYPICAL STEERING WHEELS Plate 13-4 135
1301A - STEERING GEAR. 136
STEERING GEAR ASSY. - LHC - C-K 136
1302A - STEERING GEAR HOUSING AND COVERS 136
1304A - STEERING GEAR POST AND CAM 137
1305A - STEERING POST JACKET AND BRACKET 137
1306A - STEERING GEAR CAM LEVER SHAFT 138
1307A - STEERING GEAR PITMAN ARM. 138

INDEX OF MAJOR GROUPS AND SUBGROUPS
ALSO QUICK REFERENCE INDEX OF ILLUSTRATIONS

1310A - STEERING WHEEL, HORN PUSH BUTTON, RING, CABLE, ETC. 138
1312A - STEERING REACH ROD OR DRAG LINK 139

POWER STEERING 140
SAGINAW POWER STEERING GEAR Plate 13-5 140
POWER STEERING GEAR PUMP - TYPE A Plate 13-7 141
POWER STEERING GEAR PUMP - TYPE B Plate 13-8 142
1301B - STEERING GEAR. 143
1302B - STEERING GEAR HOUSING AND COVERS 143
1304B - STEERING GEAR POST, SHAFT AND WORM 144
1305B - STEERING POST JACKET AND BRACKET 144
1306B - STEERING GEAR CAM LEVER OR PITMAN SHAFT 146
1307B - STEERING GEAR PITMAN ARM 146
1308B - POWER CYLINDER, ADAPTER, PISTON, RACK, CONTROL VALVE, PIPES, ETC. 146
1309B - STEERING GEAR PUMP, PULLEYS, BELTS, ETC. 147
1310B - STEERING WHEEL, HORN PUSH BUTTON, RING CABLE, ETC. 149
1312B - STEERING REACH ROD OR DRAG LINK 150

WHEELS 151
TYPICAL WHEELS, HUBS, DRUMS, CAPS, BEARINGS, ETC. Plate 14-1 151
HUB CAPS AND DISCS Plate 14-2 152
1402 - WHEELS, HUBS AND DRUMS 152
1407 - FRONT WHEEL BEARINGS, NUTS, ETC. 152
1408 - FRONT WHEEL GREASE WASHERS 153
1409 - WHEEL HUB COVERS OR CAPS 153
1413 - REAR COMPARTMENT WHEEL CARRIER 153

FRAME AND SPRINGS 154
TYPICAL FRAME - C-K Plate 15-2 154
FRONT and REAR SPRINGS Plate 15-3 155
1500 - FRAME ASSEMBLY 156
1501 - FRAME CROSS MEMBERS 156
1505 - REAR SPRING HANGERS 156
1507 - FRAME MISCELLANEOUS ATTACHMENTS 156
1510 - FRONT SPRINGS 156
1518 - REAR SPRINGS 156
1519 - REAR SPRING BOLT 157
1520 - REAR SPRING SHACKLE 157
1521 - REAR SPRING BUMPER 157
1522 - REAR SPRING CLIP, PLATE AND SEAT 157
1525 - REAR STABILIZER (NOT 56J) 157

FENDERS, HOOD, MISC. SHEET METAL 158
FENDERS, HOOD and MISC. SHEET METAL - 1956 C-K Plate 16-4 158
FRONT FENDER DETAILS - ALL 1956 MODELS Plate 16-10 159
FENDER and BODY SIDE MOULDINGS - MODEL 56J - K Plate 16-15 160
1601 - FRONT FENDERS 160
1602 - FRONT FENDER BOLTS, NUTS AND WASHERS 161
1604 - REAR FENDERS 161
1605 - REAR FENDER BOLTS, NUTS and WASHERS 163
1610 - REAR BUMPER GRAVEL DEFLECTOR 163
1620 - HOOD ASSEMBLY 164
1622 - HOOD LOCKS 164

SPEEDOMETER AND INSTRUMENTS 166
INSTRUMENT BOARD AND INSTRUMENTS - SERIES 56, (C-K) Plate 17-4 166

INDEX OF MAJOR GROUPS AND SUBGROUPS
ALSO QUICK REFERENCE INDEX OF ILLUSTRATIONS

1701 - INSTRUMENT PANEL . . . 167
1707 - OIL PRESSURE GAGE. . . . 167
1709 - AMMETER. . . . 167
1713 - GASOLINE GAGE. . . . 167
1714 - RADIMETER OR WATER TEMPERATURE INDICATOR . . . 167
1716 - SPEEDOMETER AND DRIVE PARTS . . . 168
SPEEDOMETER CORE AND SHAFT . . . 168
SPEEDOMETER GEAR AND PINION CHART . . . 168
1718 - CLOCK . . . 169
1720 - TACHOMETER . . . 169
1721 - VACUUM GAGE . . . 169

SHOCK ABSORBERS, BUMPERS AND GUARDS . . . 170
FRONT SHOCK ABSORBER Plate 18-1 . . . 170
REAR SHOCK ABSORBER . . . 170
BUMPER BARS and GUARDS Plate 18-2 . . . 171
FRONT and REAR . . . 171
1801 - SHOCK ABSORBERS . . . 172
1803 - FRONT BUMPERS . . . 172
1805 - REAR BUMPERS . . . 173
1807 - BUMPER GUARDS AND VERTICAL BUMPERS. . . . 173

TOOLS Illust 1812. . . . 174
BUMPER JACK. . . . 174
1812 - TOOLS . . . 174

HARD-TOP BODIES . . . 175
TYPICAL BODY INTERIOR, ACCESSORIES, MOULDINGS, ETC. Plate 23-2 . . . 175
BODY BELT, DOOR, WINDOW OPENING and BODY SIDE Plate 23-7 . . . 176
2303 - BODY HOLD DOWN BOLTS AND SHIMS. . . . 176
2304 - BODY BELT, DOOR AND ROOF MOULDINGS. . . . 177
Rear Quarter Window Opening Moulding Clip . . . 177
Door Side Moulding Clip. . . . 177
2305 - ROOF DRIP MOULDINGS . . . 178
2308 - SHROUD PROTECTOR STRIP . . . 178
2309 - SHROUD KICK PAD AND DASH LINERS . . . 179
SHROUD VENTILATOR - Body Symbol K Plate 23-11 . . . 180
2310 - SHROUD VENTILATOR . . . 181
TYPICAL INSTRUMENT BOARD - Models 56, 57, 58 Plate 23-17 . . . 183
2313 - INSTRUMENT BOARD . . . 184
2313A - Instrument Boards . . . 184
2313B - Compartment Door, Lock, Box and Light . . . 184
COMPARTMENT DOOR LOCK . . . 185
2313D - Mouldings and Name Plates. . . . 185
2315 - TONNEAU AND DOOR ASH RECEIVER. . . . 186
DOOR, HINGES, WEATHERSTRIPS and CHECKS Plate 23-20. . . . 187
2316 - DOOR, HINGES, WEATHERSTRIPS AND CHECKS . . . 187
2316A - Doors . . . 187
2316B - Door Hinges . . . 187
2316C - Door Weatherstrips . . . 188
2316D - Door Checks. . . . 188
RIGHT DOOR LOCKING MECHANISM Plate 23-21 . . . 189
2317 - DOOR LOCKS, STRIKERS, HANDLES AND REMOTE CONTROLS . . . 189
2317B - Door Handles . . . 190
2317C - Door Remote Controls . . . 190
2317D - Door Locking Controls . . . 190

INDEX OF MAJOR GROUPS AND SUBGROUPS
ALSO QUICK REFERENCE INDEX OF ILLUSTRATIONS

DOOR and R/Q INSIDE TRIM MOULDINGS Plate 23-22 191
2318 - DOOR ARM REST AND INSIDE TRIM MOULDINGS 192
2318A - Door Arm Rests 192
2318B - Door Inside Trim Mouldings 192
INSIDE DOOR TRIM MOULDINGS 192
2319 - DOOR SILL FINISHING PLATES AND BODY SILL PANEL MOULDINGS 192
RIGHT DOOR WINDOW and REGULATOR MECHANISM Plate 23-24 193
TYPICAL ELECTRIC WINDOW LIFTS Plate 23-26 194
2320 - DOOR WINDOWS, CHANNELS, RUNS, WEATHERSEALS, REGULATORS, AND HANDLES . . 195
2320A - Door Windows 195
2320B - Door Window Lift and Division Channels 195
2320C - Door Window Guide 195
2320D - Door Window Weatherseals 196
2320E - Door Window Regulators - Electric Type Control 196
2320F - Door Window Regulator Handles - Manual Control 196
2320G - Electric Window Lift Motor, Wiring and Control 197
2320H - Electric Window Lift Motor Parts 198
ELECTRIC WINDOW LIFT MOTOR 198
2321 - DOOR WINDOW VENTILATORS AND GARNISH MOULDINGS 198
2323 - REAR QUARTER AND REAR CENTER SEAT ARM RESTS, INSIDE TRIM MOULDINGS 200
2323A - Rear Quarter Arm Rests 200
2323B - Rear Quarter Trim Moulding 200
REAR QUARTER TRIM MOULDINGS 200
2323C - Rear Seat Center Arm Rests 200
RIGHT REAR QUARTER WINDOW and REGULATOR MECHANISM Plate 23-28 201
2324 - REAR QUARTER WINDOWS, CHANNELS, RUNS, WEATHERSEALS, REGULATORS AND GARNISH MOULDINGS 202
2324A - Rear Quarter Windows 202
2324B - Rear Quarter Window Guide and Run 202
2324C - Rear Quarter Window Weatherseals 203
2324E - Rear Quarter Window Regulator Handles 203
2324F - Rear Quarter Window Garnish Mouldings 203
BACK WINDOW and MOULDINGS Plate 23-30 204
2325 - BACK WINDOW, GARNISH MOULDING, ETC. 205
FRONT SEAT and ADJUSTING MECHANISM Plate 23-31 206
ELECTRICALLY OPERATED SEATS 206
TYPICAL FRONT SEAT and ADJUSTING MECHANISM Plate 23-32 207
2327 - FRONT SEAT 208
TYPICAL REAR COMPARTMENT or TRUNK and LID Plate 23-33 211
2330 - TRUNK OR DECK LID 211
TRUNK LOCK AND HOUSING 212
TRUNK EMBLEM, ESCUTCHEON 213
2338 - FRONT FLOOR BOARD 214
PEDAL PROTECTOR AND INNER SPLASH SHIELD 215
2339 - TOE BOARD 215
2341 - RUBBER FLOOR MATS AND CARPETS 215
2341A - Floor Mats 215
2341B - Front Floor Carpets 215
2341C - Rear Floor Carpet 216
2344 - SUN SHIELD OR VISOR 216
2345 - REAR VIEW MIRROR 217
WINDSHIELD and MOULDINGS Plate 23-35 218
2347 - WINDSHIELD AND MOULDINGS 218
2347A - Windshield Glass, Channels and Reveal Mouldings 218
2347B - Windshield Opening Garnish Mouldings 218
TYPICAL WINDSHIELD WIPER Plate 23-36 220

INDEX OF MAJOR GROUPS AND SUBGROUPS
ALSO QUICK REFERENCE INDEX OF ILLUSTRATIONS

ELECTRIC WINDSHIELD WIPER MOTOR Plate 23-37 221
2349 - WINDSHIELD WIPER 222
2349B - Electric Type 222
2349C - Electric Motor Parts 222
2351 - DOME AND COURTESY LAMPS 223
BODY PANELS - Body Symbol K Plate 23-38 224
2360 - BODY PANELS 225
2360A - Roof Panels, Bows and Retainers 225
2360B - Dash and Cowl Side Panels 225
2360C - Cowl Top and Windshield Opening Panels 226
2360D - Roof Rails and Drip Mouldings 226
2360E - Rear Quarter Panels 226
2360F - Sill Panels 226
2360G - Wheelhouse and Deck Side Panels 226
2360H - Deck Opening Panels 226
2360J - Rear Seat Back Shelf 227

SERVICE BULLETINS/SERVICE LETTERS 228

UTILITY ITEMS 231

ACCESSORY CODES 235

NUMERICAL INDEX 237

ALPHABETICAL INDEX

A

ADAPTER, cylinder head, water temperature gage . . 0102
ADAPTER, speedo. drive pinion 1716
ADAPTER, w/OIL SEAL, power cylinder 1308
ADAPTER, water temperature gage - w/OD 0102
ADJUSTER, bell crank to carb. rod 0312
AIR CLEANER, carburetor, wet 0303
AIR DEFLECTOR, left front fender side 1601
AIR DEFLECTOR, right front fender side 1601
AMMETER 1709
ANTENNA KIT, radio AC12
ANTI-CREEP KIT 1106
ANTI-RATTLER, hood hinge tie rod 1620
ANTI-RATTLER, push rod, door lock 2317
ANTI-SQUEAK, front fender to cowl top panel 1601
APRON, left front fender 1602
APRON, right front fender 1601
ARM and SPRING, left wiper 2349
ARM and SPRING, right wiper 2349
ARM, fuel pump rocker 0301
ARM, generator adj. 0608
ARM, generator brush 0608
ARM, lower left, steering knuckle control 1204
ARM, lower right, steering knuckle control 1204
ARM, pitman 1307
ARM REST, rear seat center 2323
ARM, steering gear pitman 1307
ARM, upper, knuckle control 1204
ARM, valve rocker 0103
ARMATURE, generator 0608
ARMATURE, motor, electric window 2320
ARMATURE, starter motor 0606
ARMATURE, w/s wiper motor 2349
AXLE ASSY., rear 1000

B

BACK-UP LAMP KIT 0632
BAFFLE and SEAL, radiator upper air 0502
BAFFLE KIT, valve chamber oil 0103
BAFFLE, main shaft oil, transmission 0702
BAFFLE, transmission, main shaft oil w/OD. 0702
BAFFLE, valve lifter cover 0103
BAG with CAP, windshield, washer AC49
BALANCE, manifold heater valve 0109
BALL, HYDROVAC, hydraulic piston check valve . . . 1112
BALL SET, steering gear shaft and worm ball nut bearing 1304
BALL,, steering gear post cam bearing 5/16" 1304
BALL STUD, clutch operating shaft bearing 0206
BAND and LINING, servo low and reverse brake 0828
BASE, arm rest 2323
BASE, sealed beam mounting 0617
BASE w/BUSHINGS, dist. timer 0601
BATTERY, drained export 0610
BEARING and COLLAR, clutch release 0203
BEARING, bell crank bracket 1209
BEARING, camshaft 0104
BEARING, generator, drive end plate 0608
BEARING, knuckle thrust, king pin 1203
BEARING, lower, steer. knuckle 1202
BEARING, lower, steering gear shaft and worm 1304
BEARING, main shaft rear, transmission 0702
BEARING, propeller, shaft support 0902
BEARING, rear, OD. shaft 0721
BEARING SET, crankshaft 0105
BEARING, steering gear front, pump drive shaft 1309
BEARING, steering gear rear, pump drive shaft 1309
BEARING, steering post jacket 1305
BEARING, thrust, steering gear shaft and worm 1304
BEARING, torque converter clutch hub 0225
BEARING, transmission, high range clutch thrust . . . 0820
BEARING, trans. output shaft 0814
BEARING, transmission, rear pinion 0705
BEARING UNIT, conn. rod 0107
BEARING, upper, steering gear shaft and worm 1304
BELL CRANK, control rod 0854
BELL CRANK, steer. 1209
BELL CRANK, throttle control 0312
BELL CRANK, hand brake - LHC 1110
BELT, fan 0506
BELT, steering gear pump drive 1309
BEZEL, climatizer, valve control AC1-
BEZEL or OVERLAY, radio AC12
BLADE, wiper 12" long 2349
BLEEDER FITTING, HYDROVAC, control valve 1112
BLOCK, brake shoe anchor 1101
BLOCKING RING, second and high synchronizer . . . 0702
BLOWER and BRACKET, climatizer AC1-
BLOWER less HEATING UNIT or COIL, defroster . . . AC1-
BOARD, instrument 2313
BODY and BASE, parking and signal lamp 0618
BODY and POPPETS, HYDROVAC, control valve . . 1112
BODY ASSEMBLY, trans., front control 0832
BODY ASSEMBLY, trans., lower rear control 0832
BODY ASSEMBLY, trans., upper rear control 0832
BODY, fuel pump rocker arm 0301
BODY, head lamp 0617
BODY, oil pump (incls. idler shaft) 0116
BODY, steering gear pump 1309
BODY, tail lamp 0619
BODY, trans., high speed governor 0830
BODY, trans., lower rear control 0832
BOLT, motor case thru, electric window 2320
BOLT, starter motor frame thru 0606
BOLT, transmission, anchor, to jacket (special) 0850
BOLT, w/s wiper motor case thru 2349
BOOT, brake cyl. 1103
BOOT, clutch operating shaft 0206
BOOT, clutch release lever 0203
BOOT, m/c 1104
BOOT, OD. control governor - rubber 0731
BOOT, starter, switch shift lever 0607
BOW, hardboard headlining 2360
BOWL, fuel filter 0304
BOX, battery 0610
BRACE, apron to front fender 1601
BRACE, battery to apron 0610
BRACE, battery to dash 0610
BRACE, center, reinforcement, instrument board . . . 2313
BRACE, end, reinforcement, instrument board 2313
BRACE, front, fender to body 1604
BRACE, front fender to body 1601
BRACE, front lower to side air deflector 1601
BRACE, inst. board to dash 2313
BRACE, left front fender to apron 1601
BRACE, lower to side air deflector 1601
BRACE, rear, right fender to body 1604
BRACE, right front fender to apron 1601
BRACE, steering post bracket to cowl 1305
BRACKET, arm rest hinge to base 2323
BRACKET, auxiliary lighting circuit breaker 0627

ALPHABETICAL INDEX

BRACKET, backing plate hand brake cable 1102
BRACKET, bell crank shaft 0854
BRACKET, clutch oper shaft supt. to trans. 0206
BRACKET, door window stop - Manual 2320
BRACKET, frame body mounting 1507
BRACKET, frame, suspension upper arm bumper . . . 1507
BRACKET, front brake hose 1107
BRACKET, front, left door vent. frame 2321
BRACKET, front, right door vent. frame 2321
BRACKET, front seat adjuster switch mounting,
electric seat 2327
BRACKET, generator support 0608
BRACKET, hand brake bell crank support 1110
BRACKET, hood lock plate support 1622
BRACKET, horn 0625
BRACKET, HYDROVAC hose 1107
BRACKET, HYDROVAC to fender 1112
BRACKET, left door window frame rear guide 2320
BRACKET, left, hand brake cable 1110
BRACKET, left, hood lock plate support 1622
BRACKET, left rear fender "V" mldg. 1604
BRACKET, left, side panel, front seat 2327
BRACKET, locking door window 2321
BRACKET, lower, left door vent. 2321
BRACKET, lower, right door vent. 2321
BRACKET, muffler support (rear of muffler) 0402
BRACKET or CASE, ammeter and radimeter mtg. . . 1709
BRACKET or CASE, oil pressure and gas gage 1707
BRACKET, r/q window run 2324
BRACKET, rear, left control, fender vent. 2310
BRACKET, rear, left door vent. frame 2321
BRACKET, rear, right door vent. frame 2321
BRACKET, rear view mirror 2345
BRACKET, right control rod lever, fender vent. 2310
BRACKET, right door window frame rear guide 2320
BRACKET, right, hand brake cable 1110
BRACKET, right, hood lock plate support 1622
BRACKET, right, outlet pipe support 0403
BRACKET, right rear fender "V" mldg. 1604
BRACKET, right, side panel, front seat 2327
BRACKET, right ventilator door link 2310
BRACKET, seat adjuster floor, electric seat 2327
BRACKET, signal light switch plate pawl 0621
BRACKET, speedometer mtg. 1716
BRACKET, spotlight, inside mounting 0633
BRACKET, spotlight, outside mounting 0633
BRACKET, steer. gear mounting 1301
BRACKET, steering post 1305
BRACKET, tachometer mounting 1720
BRACKET, upper, left door vent. 2321
BRACKET, vacuum gage mounting 1721
BRACKET, valve rocker arm shaft 0103
BRACKET w/BEARINGS, bell crank 1209
BRACKET w/BEARING, shift selector shaft upper . . . 0850
BRACKET, w/BEARING, transmission,
selector shaft upper 0850
BRACKET, w/BEARING, upper gearshift shaft 0756
BRACKET, window stop Electric 2320
BRAKE ASSEMBLY, trans., low 0827
BRAKE ASSEMBLY, trans., reverse 0827
BRAKE CYLINDER COMPLETE 1103
BRAKE CYLINDER REPAIR KIT 1103
BRAKE SHOE w/LINING 1101
BREATHER, trans. case 0811
BRUSH, horn cable contact ring 1310
BRUSH, motor, electric window 2320
BRUSH SET, generator 0608
BRUSH SET, starter motor 0606
BRUSH, w/s wiper motor 2349
BULB, back-up lamp 0632
BULB, transmission, selector indicator lamp 0850
BUMPER, compartment door hinge - rubber 2313
BUMPER, deflector to bumper bar - rubber 1610
BUMPER, door check - rubber 2316
BUMPER, left rear fender gas filler door - rubber 1604
BUMPER, lower control arm jounce - steel and rubber 1204
BUMPER, rear axle 1521
BUMPER, rear spring 1521
BUMPER, upper control arm - stl. & rubber (type B) . 1204
BUMPER, window stop - rubber Electric 2320
BUSHING and GREASE FITTING, front,
upper control arm 1204
BUSHING and GREASE FITTING, lower
control arm pivot 1204
BUSHING, Bendix drive housing, starter motor 0606
BUSHING, brake pedal 1108
BUSHING, clutch pedal shaft 0205
BUSHING, control rod bell crank shaft 0854
BUSHING, converter clutch housing 0225
BUSHING, front, rear spring 1518
BUSHING, horn push button cable 1310
BUSHING less GREASE FITTING, rear,
upper control arm 1204
BUSHING, lower control arm pivot shaft 1204
BUSHING, piston pin 0108
BUSHING, rear, rear spring 1518
BUSHING, rear shock absorber - rubber 1801
BUSHING, stabilizer shaft - rubber 1205
BUSHING, steering gear housing 1302
BUSHING, torque converter reactor shaft 0225
BUSHING, trans. case extension housing 0811
BUSHING, trans., planetary ring gear and brake drum 0817
BUSHING, transmission, high range clutch housing . 0820
BUSHING, upper control arm pivot shaft 1204
BUSHING, upper, steer. knuckle 1202
BUTTON and GUIDE, door outside handle 2317
BUTTON and WIRE, OD. control 0732
BUTTON, WIRE, SLEEVE and TUBE, OD. control . . 0732

C

CABLE and CONDUIT, hand brake, control 1116
CABLE and ENDS, rear, hand brake 1110
CABLE and TERMINALS, transmission,
selector indicator lamp 0850
CABLE, back-up, switch to lamp connector - LHC . . . 0632
CABLE, battery ground - 22" long 0630
CABLE, chassis cable to OD. relay 0731
CABLE, circuit breaker to ignition relay, electric seat . 2327
CABLE, circuit breaker to ignition relay, electric window 2320
CABLE, circuit breaker to switch, electric seat 2327
CABLE, climatizer and defroster switches to gas gage AC1-
CABLE, dist. contact arm 0601
CABLE, head lamp 0617
CABLE, head lamp ground 0617
CABLE, horn brush to chassis cables 1310
CABLE, horn push button 1310
CABLE, ign. relay to chassis cable, electric window . 2320
CABLE, ignition relay to O.D. relay - electric seat . . . 2327
CABLE, ignition relay to starter solenoid,
electric window 2320

ALPHABETICAL INDEX

CABLE, ignition relay to starter solenoid , electric seat 2327
CABLE, license lamp 0620
CABLE, OD. harness to governor 0731
CABLE, tachometer to distributor unit drive 1720
CABLE w/FUSE and FLASHER BLOCK, signal lights 0621
CABLES, tail lamp 0619
CABLES, wiring harness to starter solenoid 0627
CAGE COMPLETE OD. pinion 0728
CAM and STOP PLATE KIT, distributor 0601
CAM, OD., FW clutch 0722
CAM, steering wheel directional signal 0621
CAMSHAFT 0104
CAMSHAFT and CAM, dist. timer 0601
CAP and DIPSTICK, trans. oil filler tube 0811
CAP and DISC, hub (full disc), 15" equip. 1409
CAP and DISC, hub (spoke type) 1409
CAP and DISC, Hub (wire wheel) 15" equip. 1409
CAP, crankshaft bearing 0105
CAP, distributor 0601
CAP, front wheel hub grease 1409
CAP, gas tank filler - std. 0307
CAP, gas tank filler - locking 0307
CAP, horn push button contact 1310
CAP, horn ring 1310
CAP, HYDROVAC, hydraulic cylinder end plug or . . . 1112
CAP, oil pan filler 0115
CAP, radiator filler 0501
CAP, trans., control body direct shift valve
piston spring end 0832
CAP, trans., reverse brake piston housing 0827
CAP, windshield bag AC49
CARBURETOR, model WCFB 2394S 0302
CARPET, front floor 2141
CARPET, rear floor 2141
CARTRIDGE KIT, oil filter 0118
CASE ASSEMBLY, transmission 0811
CASE, diff w/std. diff 1004
CASE w/PLUGS, trans. (w/OD.) 0701
CATCH, hood lock safety hook 1622
CATCH, right ventilator door (on frame) 2310
CATCHER, front brake drum oil 1402
CHAIN, timing 0104
CHANNEL, left door window glass 2320
CHANNEL, right door window glass 2320
CHANNEL, windshield glass - rubber 2347
CHECK COMPLETE, door 2316
CHECK VALVE, HYDROVAC 1112
CIGAR LIGHTER COMPLETE AC14
CIRCUIT BREAKER, auxiliary lighting 0627
CIRCUIT BREAKER, lighting switch 0627
CIRCUIT BREAKER, relay to adjuster, electric seat . 2327
CIRCUIT BREAKER, window lift (2 window control) . . 2320
CIRCUIT BREAKER, wiper switch 2349
CLAMP, bell crank shaft bushing 0854
CLAMP, gas tank filler neck - except D-P 0307
CLAMP, knuckle tie rod 1207
CLAMP, outlet pipe support 0403
CLAMP, steering gear bearing ball guide 1304
CLAMP, steering gear hose 1309
CLAMP, steering post jacket 1305
CLAMP, to valve lifter cover tube 0102
CLEVIS, control rod 0854
CLEVIS, gearshift rod 0760
CLEVIS, hand brake, control cable 1116
CLEVIS, trans., control rod 0854
CLIMATIZER and DEFROSTER KIT
w/HEATING UNITS AC1
CLIP, drip moulding cover 2304
CLIP KIT, rear spring rebound 1518
CLIP or U BOLT, rear spring 1522
CLIP, switch and housing retainer, electric window . . 2320
CLIP, switch and housing retainer, electric seat 2327
CLIP, to master cylinder 1108
CLOCK KIT, electric 1718
CLUTCH and DRIVE, starter 0606
CLUTCH ASSY., high range 0820
CLUTCH, torque converter reaction 0225
COCK, radiator drain 0501
COIL, defroster, heater AC1-
COIL, ignition 0602
COLLAR, OD. stationary or sun gear shifting 0729
COLLAR, steer. post 2339
COLLAR, trans., manual valve operating lever locating 0832
CONDENSER, distributor 0601
CONE and ROLLERS, diff. bearing 1004
CONE and ROLLERS, front-R/A-pinion bearing 1005
CONE and ROLLERS, inner wheel bearing 1407
CONE and ROLLERS, outer wheel bearing 1407
CONE and ROLLERS, R/A shaft bearing 1002
CONE and ROLLERS, rear-R/A pinion bearing 1005
CONNECTING ROD w/BUSHING, less bearing 0107
CONNECTOR, circuit breaker 0627
CONNECTOR, defroster, motor to switch cable AC1
CONNECTOR, horn push button cable 1310
CONNECTOR, trans. OD. cables 0731
CONTROL ASSEMBLY, trans. 0832
CONTROL, climatizer, thermostatic valve AC1-
CONTROL, left door remote 2317
CONTROL, left vent. - zinc, fender 2310
CONTROL, right door remote 2317
CONTROL VALVE REPAIR KIT, HYDROVAC,
vacuum atmospheric side 1112
CONVERTER COMPLETE, torque 0220
CORE, climatizer AC1-
CORE, radiator 0501
CORE, speedometer shaft 1716
COUNTERSHAFT, transmission 0703
COUPLING, door motor to gear box 2320
COUPLING, gas tank to fuel pump pipe 0308
COUPLING, motor to adjuster, electric seat 2327
COVER, accelerator pedal (accessory eq.) 0312
COVER and BUSHING, steer. gear housing side . . . 1302
COVER and TUBE,, steering gear housing end 1302
COVER, climatizer control hole, instrument board . . . 2313
COVER, climatizer opening, ventilator 2310
COVER, clock hole 2313
COVER, clutch housing bolt hole 2338
COVER, floor pan oil inspection hole 2338
COVER, flywheel lower housing inspection hole 0106
COVER, fuel pump valve housing and filter 0301
COVER, gear timing sprocket 0104
COVER, hub (for AC-2425 wire wheel 1409
COVER KIT, valve rocker arm chrome 0103
COVER, left drip moulding 2304
COVER, left, front drip moulding 2304
COVER, OD. solenoid (stamped 1118155) 0731
COVER, oil pump body 0116
COVER, R/A housing 1001
COVER, R/A universal joint flange dust 1006
COVER, radio control opening 2313
COVER, right cyl. head rear end 0102
COVER, right drip moulding 2304
COVER, right, front drip moulding 2304
COVER, safety pad, instrument board 2313
COVER, steer. gear housing rack 1302
COVER, steer. gear w/oil seal control valve top 1302
COVER, steering gear housing side 1302
COVER, steering gear housing top 1302

ALPHABETICAL INDEX

COVER, steering gear pump body 1309
COVER, steering gear pump reservoir 1309
COVER, trans., lower rear control body 0832
COVER, valve lifter 0103
COVER, valve rocker arm 0103
COVER w/PLATE, clutch 0202
COVER w/GASKET, OD. 0731
COVER w/BEARING, steer. gear housing end 1302
COVER, water pump 0505
COVER, weatherstrip striker - rubber 2320
CRANKSHAFT 0105
CROSS and BEARING UNIT, universal joint 0901
CROSS SHAFT, engine trans. cut out 0312
CUP, inner wheel bearing 1407
CUP, diff, bearing 1004
CUP, front, R/A pinion bearing 1005
CUP, horn push button spring 1310
CUP, HYDROVAC, hydraulic piston - rubber 1112
CUP, HYDROVAC, hydraulic piston push rod seal . . 1112
CUP, HYDROVAC, hydraulic valve piston 1112
CUP, m/c piston - rubber 1104
CUP, outer wheel bearing 1407
CUP, R/A shaft bearing 1002
CUP, rear, R/A-pinion bearing 1005
CUP, steering gear post cam bearing 1304
CUP, wheel cyl. 1103
CUSHION, door vent. glass 2321
CUSHION, HYDROVAC, hydraulic piston 1112
CUSHION, propeller, shaft support 0902
CUSHION, upper and sides, door window glass 2320
CYLINDER BLOCK 0102
CYLINDER HEAD OUTLET, engine water 0102
CYLINDER, power 1308
CYLINDER SHELL, HYDROVAC 1112

D

DAMPER, trans., shaft and cage oil 0817
DASH LINER 2309
DEFLECTOR, fender lower air 1601
DEFLECTOR, front fender lower air 1601
DEFLECTOR, HYDROVAC, hydraulic piston 1112
DEFLECTOR, inlet valve stem oil 0103
DEFLECTOR, left rear fender gravel 1604
DEFLECTOR, outlet pipe 0403
DEFLECTOR, rear bumper gravel - (dual exhaust) . . 1610
DETENT, trans., control body 0832
DIAL, transmission, selector indicator 0850
DIAPHRAGM and LINK, fuel pump 0301
DIAPHRAGM and PLATES, HYDROVAC, control valve 1112
DIAPHRAGM, fuel pump outlet 0301
DISTRIBUTOR COMPLETE w/MODIFIER, ignition . . 0601
DOOR, compartment 2313
DOOR COMPLETE, right ventilator 2310
DOOR, left 2316
DOOR, left rear fender gas filler 1604
DOOR, right 2316
DOVETAIL, hood lock 1622
DRIVE, power steering 0105
DRIVE UNIT ASSY., tachometer 1720
DRIVER and CONNECTING ARM, left, w/s wiper . . . 2349
DRIVER and CONNECTING ARM, right, w/s wiper . . 2349
DRIVER, trans., rear oil pump 0824
DRUM, wheel brake 1402
DUST SHIELD, propeller, support bearing 0902

E

ECCENTRIC, fuel pump actuating 0301
ELBOW, fitting to HYDROVAC outlet screw 1112
ELBOW, HYDROVAC, vacuum hose to valve 1112
ELBOW, power cylinder bleeder pipe 1308
ELBOW, valve to power cylinder pipes universal fitting 1308
EMBLEM, center grille 0502
END, bell crank to carb. rod adj. 0312
END PLATE w/SEAL, HYDROVAC 1112
END, tie rod, inner right, outer left 1207
END, tie rod, outer right, inner left 1207
EQUALIZER, hand brake rear cable 1110
EXTENSION, fender lower 1601
EXTENSION, front fender lower 1601
EXTENSION, left, exhaust manifold 0109

F

FACE, inst. board - Engine turn 2313
FAN BLADES - 4 blade 0506
FAN, climatizer, blower AC1-
FENDER, front, w/APRON 1601
FENDER less APRON, left front 1601
FENDER less APRON, right front 1601
FENDER, rear (prime) 1604
FERRULE, horn push button cable 1310
FILLER, door window glass channel - wood 2320
FILTER, fuel 0304
FILTER, fuel filter bowl 0304
FILTER, fuel pump 0301
FIN, left rear fender 1604
FIN, right rear fender 1604
FITTING, brake HYDROVAC pipe (inlet and outlet) . . 1112
FITTING, HYDROVAC, hydraulic cylinder bleeder . . . 1112
FITTING, HYDROVAC, hydraulic valve piston 1112
FITTING, m/c outlet (AD.) 1104
FITTING, spark modifier suction 0601
FITTING, wheel brake cyl. bleeder 1/4" - 28x1" 1103
FLANGE, trans. case front 0701
FLANGE, transmission, universal joint 0745
FLANGE, w/COVER, R/A universal joint 1006
FLANGE, worm shaft to steering post 1304
FLASHER, signal lights 0621
FLYWHEEL, vibration damper 0105
FLYWHEEL w/GEAR 0106
FORK, gearshift second and high 0747
FORK, OD. shift 0725
FRAME and LIFT CHANNEL, front and lower half, left window 2324
FRAME and LIFT CHANNEL, front and lower half, right window 2324
FRAME and ROLLERS, left door window glass 2320
FRAME and ROLLERS, right door window glass 2320
FRAME, front seat bottom 2327
FRAME, incls. engine front supt. bracket 1500
FRAME, left door vent. outer 2321
FRAME, left front seat back 2327
FRAME, rear and upper half, rear quarter window . . . 2324
FRAME, right door vent. outer 2321
FRAME, right front seat back 2327
FRAME, seat bottom - Electric 2327
FUEL PUMP, assy 0301
FUEL PUMP REPAIR KIT 0301

G

GAGE, gasoline 1713
GAGE, oil pan level 0115
GAGE, oil pressure 1707
GAGE, vacuum 1721
GAGE, water temperature 0102

ALPHABETICAL INDEX

GASKET, left exhaust manifold extension 0109
GASKET, air cleaner to carb. 0303
GASKET and SEAL KIT, steer. gear 1302
GASKET, back-up lamp lens 0632
GASKET, carb. to manifold 0302
GASKET, center, exh. manifold 0109
GASKET, cylinder head 0102
GASKET, distributor 0601
GASKET, door open. weatherstrip 2320
GASKET, end, exh manifold 0109
GASKET, engine water outlet 0102
GASKET, exhaust pipe flange 0109
GASKET, front, oil pan 0115
GASKET, front side retainer, door window 2320
GASKET, fuel filter bowl 0304
GASKET, fuel pump 0301
GASKET, gasoline gage 0307
GASKET, gear timing sprocket cover 0104
GASKET, gearshift control housing 0701
GASKET, housing to fender, ventilator 2310
GASKET, housing to trans. 0230
GASKET, housing to trans. case 0811
GASKET, HYDROVAC, control valve body 1112
GASKET, HYDROVAC end plate 1112
GASKET, HYDROVAC, hydraulic cylinder cap - copper 1112
GASKET, inlet manifold 0109
GASKET, king pin 1203
GASKET, left exhaust manifold extension 0109
GASKET, license lamp lens - rubber 0620
GASKET, lower, housing to housing, ventilator 2310
GASKET, manifold heater valve housing 0109
GASKET, OD. adapter plate 0720
GASKET, OD. control governor cover 0731
GASKET, OD. housing 0720
GASKET, oil filter cover 0118
GASKET, oil pump body 0116
GASKET, parking and signal lamp lens 0618
GASKET, parking switch, w/s wiper motor 2349
GASKET, power cylinder 1308
GASKET, R/A housing cover-paper 1001
GASKET, R/A pinion bearing oil seal-paper 1005
GASKET, R/A shaft outer retainer 1002
GASKET, right cyl. head rear end cover 0102
GASKET, right vent. door frame - rubber 2310
GASKET, right ventilator door - rubber 2310
GASKET SET, cylinder head, valve grinding 0102
GASKET SET, exhaust manifold 0109
GASKET SET, inlet manifold 0109
GASKET SET, oil pan 0115
GASKET SET, steering gear pump 1309
GASKET SET, transmission 0701
GASKET SET, valve rocker arm cover (2 gaskets) . . 0103
GASKET, speedo. shaft to transmission 1716
GASKET, spotlight, outside mounting bracket 0633
GASKET, steer. gear housing end cover 1302
GASKET, steer. gear side cover 1302
GASKET, steering gear housing side cover 1302
GASKET, steering gear housing top cover - brass . . . 1302
GASKET, steering gear pump reservoir cover 1309
GASKET, steering gear reservoir cover bolt guide . . . 1309
GASKET, steering gear to body and cover - rubber . . 1309
GASKET, tail lamp lens 0619
GASKET, to body, steering gear - cork 1309
GASKET, to cover, steering gear - cork 1309
GASKET, torque converter pump shaft 0225
GASKET, trans. case oil pan 0811
GASKET, trans. oil control manifold 0832
GASKET, upper, housing to housing, ventilator 2310
GASKET, valve lifter cover 0103
GASKET, water manifold 0505
GASKET, water pump cover 0505
GASKET, water pump manifold 0505
GASKET, water temperature gage adapter 0102
GEAR and BRAKE DRUM, trans., planetary ring 0817
GEAR and BUSHING, transmission, second speed . . 0702
GEAR and PINION KIT, diff. side bevel 1004
GEAR and PINION, R/A 1005
GEAR BOX, left door regulator 2320
GEAR BOX, right door regulator 2320
GEAR CLUSTER, countershaft, transmission 0703
GEAR, diff. side bevel 1004
GEAR, distributor 0601
GEAR, OD. control governor drive 0731
GEAR, OD. shaft ring 0721
GEAR, OD. stationary or sun 0729
GEAR, oil pump driven 0116
GEAR, oil pump idler 0116
GEAR, spotlight operating 0633
GEAR, starter ring 0106
GEAR, trans. parking lock 0837
GEAR, transmission, low and reverse sliding 0702
GEAR w/BUSHING, transmission, reverse idler 0704
GEAR, w/s wiper motor driven 2349
GENERATOR ASSEMBLY less PULLEY 0608
GLASS, back window 2325
GLASS, door vent. 2321
GLASS, door window 2320
GLASS, rear quarter window 2324
GLASS, windshield 2347
GOVERNOR ASSEMBLY, trans. 0830
GOVERNOR, OD. control 0731
GREASE FITTING, propeller, shaft sleeve 0900
GREASE SEAL, clutch operating shaft (rubber) 0206
GRILLE, radiator center (in hood) 0502
GRILLE, radiator side 0502
GROMMET, bracket mounting, w/s wiper - rubber . . . 2349
GROMMET, brake pedal 1108
GROMMET, cable dash, w/s wiper - rubber 2349
GROMMET, chassis cables - dash - rubber 0627
GROMMET, front shock absorber 1801
GROMMET, gearshift, lever 0756
GROMMET, speedo. shaft dash 1716
GROMMET, tail lamp, sock and cables to fender 0619
GROMMET, trans., selector lever - rubber 0850
GROMMET, vacuum gage to carb. hose dash 1721
GUARD, chrome door edge AC16
GUIDE, brake shoe adjusting screw 1101
GUIDE, door check arm 2316
GUIDE, hand brake, control handle and plunger 1116
GUIDE, hand brake rear cable 1110
GUIDE, left r/q window horizontal 2324
GUIDE, left r/q window vertical 2324
GUIDE, power cylinder rack 1308
GUIDE, rear, left door window 2320
GUIDE, rear, right door window 2320
GUIDE, right r/q window horizontal 2324
GUIDE, right r/q window vertical 2324
GUIDE, steering gear ball nut bearing ball 1304
GUIDE, steering gear reservoir cover bolt 1309
GUIDE, trans., reverse brake piston 0827

ALPHABETICAL INDEX

H

HAIR, HYDROVAC, control valve 1112
HANDLE and BRACKET, right vent. control, fender . 2310
HANDLE and PLUNGER, hand brake, control cable pull 1116
HANDLE, door inside 2317
HANDLE, door outside 2317
HANDLE, door window regulator 2320
HANDLE, front seat adj. track lock 2327
HANDLE, left door vent. 2321
HANDLE, regulator, r/q window 2324
HANDLE, right door vent. 2321
HANDLE, spotlight 0633
HANDLE w/BRACKET, left door vent. 2321
HANDLE w/BRACKET, right door vent. 2321
HANDLE, window regulator 2324
HANGER, gas tank 0307
HANGER w//BODY BRACKET, front left, rear spring . 1505
HANGER w//,BODY BRACKET, front right, rear spring 1505
HARNESS, chassis wiring 0627
HARNESS, door window wiring 2320
HARNESS, OD. control wiring 0731
HARNESS, tail lamp cables 0627
HEAD, commutator end, electric window 2320
HEAD, commutator end, w/s wiper motor 2349
HEAD, cylinder 0102
HEAD, drive end, electric window 2320
HEAD LAMP 0617
HINGE, compartment door 2313
HINGE, lower, left door 2316
HINGE, lower, right door 2316
HINGE, rear fender gas filler door 1604
HINGE, upper, left door 2316
HINGE, upper, right door 2316
HINGE w/LINKS, left, hood top 1620
HINGE w/LINKS, right, hood top 1620
HOOK, hood lock safety 1622
HORN 0625
HORN RING, w/contact cap 1310
HOSE, brake flexible 1107
HOSE, climatizer, air duct to blower AC1-
HOSE, defroster, blower AC1-
HOSE, front, brake flexible 1107
HOSE, gas tank filler neck 0307
HOSE, HYDROVAC 1107
HOSE, HYDROVAC manifold to check valve-rubber . 1112
HOSE, HYDROVAC, vacuum 1112
HOSE, radiator 0507
HOSE, steering gear pump to control valve return . . . 1309
HOSE, steering gear pump to control valve pressure 1309
HOSE, steering gear pump to control valve return . . . 1309
HOSE, vacuum gage to carburetor 1721
HOUSING and BUSHING, trans. case extension 0811
HOUSING and BUSHING, transmission,
high range clutch 0820
HOUSING and VALVES, fuel pump valve 0301
HOUSING, climatizer core AC1-
HOUSING, clutch 0209
HOUSING, front half, left ventilator 2310
HOUSING, front half, right ventilator 2310
HOUSING, front seat adjuster switch, electric seat . . 2327
HOUSING, gear shift control 0701
HOUSING, gearshift, shaft spring 0756
HOUSING, horn cable contact ring brush receptacle . 1310
HOUSING, left door switch (1-button) Chrome 2320
HOUSING, lower, flywheel 0106
HOUSING, rear half, left ventilator 2310
HOUSING, rear half, right ventilator 2310
HOUSING, right door switch (1-button) Chrome 2320
HOUSING, steering gear 1302
HOUSING, torque converter 0230
HOUSING, transmission, selector indicator lamp 0850
HOUSING, w/CARRIER ASSY., R/A 1001
HOUSING, w/BUSHING, Bendix drive, starter motor . 0606
HOUSING, w/BUSHING, torque converter clutch 0225
HUB and CUPS, wheel 1402
HUB and DRUM, wheel 1402
HUB, fan 0506
HUB, high range clutch 0820
HUB ONLY, wheel 1402
HUB, torque converter clutch 0225
HUB, torque converter first turbine 0225
HYDROVAC KIT 1112
HYDROVAC REPAIR KIT 1112
HYDROVAC UNIT, brake 1112

I

IMPELLER, water pump 0505
INSULATOR, circuit breaker - fish paper 0627
INSULATOR, engine rear support 0101
INSULATOR, front spring - rubber 1510
INSULATOR, front support, transmission oil cooler . . 0101
INSULATOR, gearshift, outer shift lever 0747
INSULATOR, hood top 1620
INSULATOR, lower, steering post 1304
INSULATOR, outer shift lever 0747
INSULATOR, upper, steering post 1304
INSULATOR, horn cable contact ring 1310

J

JACK 1812
JACKET, steering post 1305
JUNCTION BLOCK, head lamp cables 0627
JUNCTION BLOCK, starter cables 0627

K

KEEPER, compartment door lock 2313
KEY, compartment door lock (Hurd) 2313
KEY, door outside lock (Hurd) number 2317
KEY, ignition lock 0602
KICK PAD 2309
KING PIN 1203
KING PIN KIT 1203
KIT, connecting arm bushing and grommet, w/s wiper 2349
KIT, door lock and ignition lock cylinder (Hurd) 2317
KIT, ignition and door lock (Hurd) 0602
KIT, parking braking warning light 1116
KLEENEX DISPENSER AC13
KNOB, ash receiver 2315
KNOB, climatizer, valve control AC1-
KNOB, door locking push rod 2317
KNOB, gearshift lever(Black) threaded type 0756
KNOB radio, volume and tuning AC12
KNOB, right vent. control handle, fender 2310
KNOB, right ventilator door 2310
KNOB, spotlight handle 0633
KNOB, transmission, selector lever 0850
KNUCKLE, steer. 1202

L

LAMP, back-up 0632
LAMP, fender parking and signal 0618
LAMP less BULB, license plate 0620
LATCH or PAWL, hand brake, control plunger 1116

ALPHABETICAL INDEX

LEAF, rear spring main (No. 1) 1518
LENS, back-up lamp 0632
LENS, license lamp 0620
LENS, parking and signal lamp 0618
LENS, tail lamp 0619
LEVER and BALL STUD, clutch release 0203
LEVER and BRACKET, hood lock operating 1622
LEVER and GUIDE, NoRol valve 1105
LEVER and SHAFT, gearshift, ... 0747
LEVER, gearshift 0747
LEVER, gearshift 0759
LEVER, gearshift (painted) 0756
LEVER, gearshift, outer 0747
LEVER, hood lock latch 1622
LEVER, right control rod, fender vent. 2310
LEVER, signal switch oper. 0621
LEVER, spotlight, switch operating 0633
LEVER, starter clutch and drive operating 0606
LEVER, trans., inner, manual valve operating 0832
LEVER, trans., inner, throttle valve operating 0832
LEVER, trans., low brake band 0828
LEVER, trans., outer, manual valve operating 0832
LEVER, trans., outer, throttle valve operating 0832
LEVER, trans. parking lock gear operating 0837
LEVER, trans., reverse brake band 0828
LEVER, transmission, selector 0850
LEVER w/GREASE FITTING, transmission,
selector shaft 0850
LID and DEFLECTOR, left vent. (in fender) 2310
LID and DEFLECTOR, right vent. (in fender) 2310
LID, trunk 2330
LIGHT, compartment AC13
LINER, door window frame front guide 2320
LINING SET, brake shoe 1101
LINK and SCREW, starter, switch lever to oper. lever 0607
LINK, clutch operating shaft 0206
LINK, left door remote control 2317
LINK, left ventilator lid, fender vent. 2310
LINK, m/c connecting 1104
LINK, rear brake shoe operating 1101
LINK, right door remote control 2317
LINK, right lid, fender vent. 2310
LINK, right ventilator door 2310
LINK, torque tube to track, electric seat 2327
LINK, trans., manual valve operating 0832
LOCK & HOUSING w/LATCH & KEYS, door (Yale),
compartment 2313
LOCK CYLINDER w/KEYS, ignition (Hurd) 0602
LOCK, left door 2317
LOCK, right door 2317
LOCK RING, distributor 0601
LOCK w/KEYS, door outside (Hurd) 2317
LOCKING FILLER CAP, gas tank (accessory) 0307

M

MANIFOLD, exhaust 0109
MANIFOLD, inlet 0109
MANIFOLD, trans. oil control. 0832
MANIFOLD, steering gear pump reservoir 1309
MANIFOLD w/PLUGS, water pump 0505
MASTER CYLINDER COMPLETE 1104
MASTER CYLINDER REPAIR KIT 1104
MAT, front floor AC41
MAT, trunk floor - White, Brown, Gray 2341
MEMBER, frame, body front pillar supt. cross 1501
MEMBER, frame, engine rear supt. cross 1501
MEMBER, frame front cross 1501
MEMBER, frame, gas tank cross 1501
MEMBER, frame, prop. shaft supt. cross 1501
MEMBER, frame, rear shock absorber cross 1501
MIRROR and ARM, rear view 2345
MIRROR, outside AC45
MIRROR, visor vanity AC45
MOTOR and BRACKET, w/s wiper 2349
MOTOR, climatizer, blower AC1-
MOTOR, defroster blower AC1-
MOTOR, front seat adjuster, electric seat 2327
MOTOR, window lift 2320
MOULDING and FASTENER, inside upper, r/q 2323
MOULDING and FASTENER, upper, r/q 2323
MOULDING and RETAINER, seat back panel,
electric seat 2327
MOULDING, center, door 2318
MOULDING, center, inside door 2318
MOULDING, corner, reveal, back window 2325
MOULDING, door curb 2304
MOULDING, door side 2304
MOULDING, front fender lower air deflector 1601
MOULDING, front, roof drip 2305
MOULDING, hood top lower 1620
MOULDING, inner left, rear fender fin 1604
MOULDING, inner right, rear fender fin 1604
MOULDING, left, back window garnish 2325
MOULDING, left door open. front upper weatherseal . 2304
MOULDING, left, fender wheel opening 1601
MOULDING, left, front fender curb 1601
MOULDING, left, front fender side 1601
MOULDING, left, garnish, back window 2325
MOULDING, left inst. board 2313
MOULDING, left, r/q window 2324
MOULDING, left rear fender "V" 1604
MOULDING, left rear fender curb 1604
MOULDING, left rear fender side 1604
MOULDING, left rear fender to body bead 1604
MOULDING, left rear fender wheel opening 1604
MOULDING, left, roof drip 2305
MOULDING, left, side extension, windshield 2347
MOULDING, left side, reveal, windshield 2347
MOULDING, left, windshield 2347
MOULDING, lower, door 2318
MOULDING, lower, inside door 2318
MOULDING, lower, inside left r/q 2323
MOULDING, lower, inside right r/q 2323
MOULDING, lower, left r/q 2323
MOULDING, lower, reveal, back window 2325
MOULDING, lower, reveal, windshield 2347
MOULDING, lower, right r/q 2323
MOULDING, lower, windshield 2347
MOULDING, outer left, rear fender fin 1604
MOULDING, outer right, rear fender fin 1604
MOULDING, right, back window garnish 2325
MOULDING, right door open, front upper weatherseal 2304
MOULDING, right, fender wheel opening 1601
MOULDING, right, front fender curb 1601
MOULDING, right, front fender side 1601
MOULDING, right, garnish, back window 2325
MOULDING, right garnish door window 2321
MOULDING, right inst. board 2313
MOULDING, right, r/q window 2324
MOULDING, right rear fender "V" 1604
MOULDING, right rear fender curb 1604
MOULDING, right rear fender side 1604
MOULDING, right rear fender to body bead 1604
MOULDING, right rear fender wheel opening 1604
MOULDING, right, roof drip 2305
MOULDING, right, side extension, windshield 2347
MOULDING, right side, reveal, windshield 2347
MOULDING, right, windshield 2347
MOULDING, upper, inside left door 2318
MOULDING, upper, left door 2318
MOULDING, upper, reveal, back window 2325
MOULDING, upper, reveal, windshield 2347

ALPHABETICAL INDEX

MOULDING, upper, right door 2318
MOULDING, w/CLIPS, rear quarter window left 2304
MOULDING, w/CLIPS, rear quarter window right 2304
MOULDING, windshield left, Stainless Steel 2347
MOULDING, windshield right, Stainless Steel 2347
MUFFLER 0402

N

NAME PLATE, control knob "Air" 2313
NAME PLATE, control knob "Defroster" 2313
NAME PLATE, control knob "Heat" 2313
NAME PLATE, control knob "Inst. Lts." 2313
NAME PLATE, control knob "Lights" 2313
NAME PLATE, control knob "Wiper" 2313
NECK, gas tank filler 0307
NIPPLE, HYDROVAC, vacuum hose to carburetor . . 1112
NoRol UNIT (std. and OD. transmissions) 1105
NoRol REPAIR KIT 1105
NOZZLE, windshield washer AC49
NUT, HYDROVAC, vacuum piston lock 1112
NUT, propeller, shaft sleeve grease washer or cap . . 0900
NUT, wheel hub stud 1402

O

OIL FILTER 0118
OIL PAN w/PLUG 0115
OIL PUMP COMPLETE 0116
OIL SEAL, crankshaft, rear bearing cap - asbestos . . 0105
OIL SEAL, gearshift, inner shift lever shaft 0747
OIL SEAL, housing, trans. case 0811
OIL SEAL, inner-R/A shaft-leather 1002
OIL SEAL, OD. housing 0720
OIL SEAL, OD. shift shaft 0725
OIL SEAL, OD. solenoid pawl operating rod 0731
OIL SEAL, power cylinder rod 1308
OIL SEAL, R/A pinion bearing-leather 1005
OIL SEAL, steer. gear control valve top cover 1302
OIL SEAL, steering gear cam lever shaft 1306
OIL SEAL, steering gear pump drive shaft 1309
OIL SEAL, steering gear shaft and worm 1304
OIL WICK, distributor 0601
OILER, generator, commutator end plate 0608
OILER, generator, drive end plate 0608
"O" RING, trans., lower, tube 0824
"O" RING, trans., upper, tube 0824
ORNAMENT, hood top 1620
OUTLET, engine water 0102

P

PACKING, HYDROVAC, vacuum piston - leather . . . 1112
PAD, brake pedal 1108
PAD, clutch pedal 0204
PAD, horn push button shock - rubber 1310
PAD, safety - rubber, instrument board 2313
PAN ASSEMBLY, trans. case oil 0811
PANEL, ash receiver front 2315
PANEL ASSY., lower deck open. 2360
PANEL, dash 2360
PANEL KIT, cowl top and w/s opening 2360
PANEL KIT, dash, right, cowl side 2360
PANEL KIT, left, cowl side 2360
PANEL KIT, left, deck open. side 2360
PANEL KIT, left, wheelhouse 2360
PANEL KIT, right, deck open. side 2360
PANEL KIT, right, wheelhouse 2360
PANEL KIT, upper, deck open. 2360
PANEL, left r/q window regulator 2324
PANEL, left rear fender to bumper filler 1604
PANEL, left sill 2360
PANEL, lower air intake 1601
PANEL, lower air intake, front fender 1601
PANEL, lower left, inner r/q 2360
PANEL, lower left, side trim, electric seat 2327
PANEL, lower left, side trim, front seat 2327
PANEL, lower right, inner r/q 2360
PANEL, lower right, side trim, front seat 2327
PANEL, lower right, side trim, electric seat 2327
PANEL, right r/q window regulator 2324
PANEL, right rear fender to bumper filler 1604
PANEL, right sill 2360
PANEL, upper left, side trim, front seat 2327
PANEL, upper right, side trim, front seat 2327
PAWL, OD, stationary or sun gear 0729
PAWL, signal switch plate 0621
PEDAL, accelerator 0312
PEDAL, clutch 0204
PEDAL w/BUSHINGS, brake 1108
PIN and BUSHING KIT, upper control arm pivot 1204
PIN, brake shoe guide 1101
PIN, diff. pinion shaft locking 1004
PIN, hand brake, control cable pull handle and
plunger guide 1116
PIN, HYDROVAC, hydraulic piston retaining 1112
PIN, left, king 1203
PIN, lower control arm pivot 1204
PIN, lower hinge, door 2316
PIN, OD. shift fork guide 0725
PIN, regulator stop, r/q window 2324
PIN, right, king 1203
PIN, trans., brake band anchor 0828
PIN, trans. parking lock gear operating lever stop . . . 0837
PIN, upper control arm pivot 1204
PIN, upper hinge, door 2316
PINION, diff. 1004
PINION, trans., long, planetary 0817
PINION, trans., short, planetary 0817
PINION, transmission, main drive 0705
PIPE and NUT, steering gear pump to control
valve return hose 1309
PIPE and NUTS, power cylinder, valve
to lower end of cyl. 1308
PIPE and NUTS, power cylinder bleeder 1308
PIPE and NUTS, power cylinder,
valve to head end of cyl. 1308
PIPE, auto. choke to manifold 0302
PIPE, exhaust 0401
PIPE, oil pump suction 0116
PIPE, outlet 0403
PIPE w/NUTS, anti-creep to front tee 1107
PIPE w/NUTS, brake, long, tee to hose 1107
PIPE w/NUTS, brake, short, tee to hose 1107
PIPE w/NUTS, brakes, m/c, NoRol 1107
PIPE w/NUTS, brakes, NoRol to m/c 1105
PIPE w/NUTS, fuel pump to fuel filter 0308
PIPE w/NUTS, gas tank to fuel pump 0308
PIPE w/NUTS, HYDROVAC to front pipe tee 1107
PIPE w/NUTS, left, rear brake tee to brake 1107
PIPE w/NUTS, m/c or anti creep to rear hose 1107
PIPE w/NUTS, m/c or anti-creep to front tee 1107
PIPE w/NUTS, m/c to anti-creep 1107
PIPE w/NUTS, NoRol to HYDROVAC 1107
PIPE w/NUTS, NoRol to rear hose 1107
PIPE w/NUTS, oil filter 0118
PIPE w/NUTS, right, rear brake tee to brake 1107
PIPE w/NUTS, tee to rear hose 1108
PIPE w/NUTS, transmission inlet, oil cooler 0841
PIPE w/NUTS, transmission outlet, oil cooler
(trans. end) 0841
PIPE w/NUTS, tee to rear hose 1107
PISTON COMPLETE, HYDROVAC, hydraulic 1112
PISTON, HYDROVAC, hydraulic valve 1112
PISTON PACKING KIT, HYDROVAC, vacuum 1112

ALPHABETICAL INDEX

PISTON, power cylinder 1308
PISTON RING SET 0108
PISTON, torque converter clutch 0225
PISTON, trans., control body low high shift valve 0832
PISTON, trans., front, control body direct shift valve . 0832
PISTON, trans., rear control body direct shift valve . . 0832
PISTON, trans., reverse brake 0827
PISTON, transmission, high range clutch 0820
PISTON w/PIN 0108
PISTON w/CUP, m/c 1104
PISTON, wheel cyl. 1103
PIVOT, lower, left door vent. 2321
PIVOT, lower, right door vent. 2321
PLATE and BLOCKING RING, OD.
stationary or sun gear 0729
PLATE and BRUSH HOLDER,
commutator end, generator 0608
PLATE and FACINGS, torque converter clutch driven 0225
PLATE ASSY., hood lock 1622
PLATE, brake backing 1102
PLATE, brake, rear hose extension (dual exhaust) . . 1107
PLATE, brake shoe anchor 1101
PLATE, clutch 0201
PLATE, dist. timer base 0601
PLATE, driven, high range clutch 0820
PLATE, front seat adjuster switch mounting,
electric seat 2327
PLATE, front torque converter reaction bearing 0225
PLATE, generator, drive end 0608
PLATE, HYDROVAC, inner, vacuum piston 1112
PLATE, HYDROVAC, outer, vacuum piston 1112
PLATE, left door sill 2319
PLATE, left door switch mounting (1-button),
electric window 2320
PLATE, left, rear spring clip 1522
PLATE, OD. housing adapter 0720
PLATE, OD. stationary or sun gear 0729
PLATE, power cylinder rack stop 1308
PLATE, rear hose extension (dual exhaust) 1107
PLATE, right door sill 2319
PLATE, right door switch mounting, electric window . 2320
PLATE, right, rear spring clip 1522
PLATE, signal lights switch 0621
PLATE, starter motor commutator end 0606
PLATE, steering gear pump pressure 1309
PLATE, steering post 1304
PLATE, torque converter clutch pressure 0225
PLATE, torque converter hub bearing 0225
PLATE, torque rear converter reaction bearing 0225
PLATE, trans., front, upper rear control body 0832
PLATE, trans., high speed governor 0830
PLATE, trans., low speed governor 0832
PLATE, trans. oil control valve separator 0832
PLATE, trans., rear, upper rear control body 0832
PLATE, transmission, second and high
synchronizer shifter 0702
PLATE, w/s wiper motor gear cam 2349
PLATE, wheel, rear backing plate reinforcing 1102
PLUG and BREATHER, steer. gear housing grease . 1302
PLUG, brake shoe adjusting screw backing plate . . . 1101
PLUG, cup, valve rocker arm 0103
PLUG, cylinder block water jacket 0102
PLUG,, steering gear housing grease pipe 1302
PLUG, trans. case oil drain 0811
PLUG, trans., control body reverse shuttle valve 0832
PLUG, trans., control body throttle limit valve 0832
PLUG, vacuum wiper control cable dash hole - rubber 2349
PLUNGER, gearshift, inner shift lever interlock 0747
PLUNGER, steer. gear control valve centering spring 1302
POINT SET, dist. contact 0601
POST and CAM, steering 1304
PROP, hood top 1620
PROPELLER SHAFT and JOINT 0900
PROTECTOR, door wire, electric window 2320
PULLEY, fan drive 0506
PULLEY, generator driving 0608
PULLEY, power steering drive 0105
PULLEY, steering gear pump drive 1309
PUMP and SHAFT KIT, trans., front oil 0823
PUMP ASSEMBLY, trans., front oil 0823
PUMP ASSEMBLY, trans., rear oil 0824
PUMP, torque converter 0225
PUMP w/RESERVOIR, steering gear, hydraulic 1309
PUMP, windshield washer - bellows type AC49
PUSH ROD, accelerator 0312
PUSH ROD and END, HYDROVAC 1112
PUSH ROD, brake shoe operating 1101
PUSH ROD RETAINER RING KIT - For Hydrovac . . . 1112
PUSH ROD, valve rocker arm 0103

R

RACE, torque converter reaction clutch outer 0225
RACK KIT, roof luggage AC60
RACK, power cylinder 1308
RADIMETER, - dash unit 1714
RADIO AC12
RAIL, OD. shift 0725
REACTOR, torque converter 0225
RECEPTACLE, horn cable contact ring brush 1310
REGULATOR, left, door window 2320
REGULATOR, left, r/q window 2324
REGULATOR, right, door window 2320
REGULATOR, right, r/q window 2324
REINF. and BRACE ASSY., inst. board 2313
REINFORCEMENT, hood top front 1620
RELAY, horn 0625
RELAY, ignition switch 2320
RELAY, ignition switch, electric seat 2327
RELAY, OD. solenoid control 0731
REPAIR KIT, steering gear pump 1309
RESERVOIR, steering gear pump 1309
RESISTOR, ignition coil primary 0602
RETAINER, ash receiver 2315
RETAINER, bell crank shaft bushing 0854
RETAINER, cap & disc (for AC-2425 wire wheel) . . . 1409
RETAINER, clutch operating shaft boot 0206
RETAINER, front shock absorber grommet 1801
RETAINER, front side, left, door window 2320
RETAINER, front side, right, door window 2320
RETAINER, HYDROVAC, cup 1112
RETAINER, kick pad 2909
RETAINER, lower control arm pivot shaft bushing . . . 1204
RETAINER, OD., FW clutch roller 0722
RETAINER, propeller, shaft grease washer 0900
RETAINER, rear axle bumper 1521
RETAINER, rear spring bumper 1521
RETAINER, seal cup - For Hydrovac 1112
RETAINER, stabilizer shaft bushing 1205
RETAINER, steering gear reservoir screen 1309
RETAINER, steering gear shaft oil washer 1306
RETAINER, transmission, high range clutch
piston spring 0820
RETAINER, upper control arm bushing 1204
RETAINER, valve spring 0103
RIM, battery hold down 0610
RIM, head lamp - chrome 0617
RIM, spotlight 0633
RING and LUGS, sealed beam retaining 0617
RING, handle to separator, r/q window 2324
RING, horn push button cable contact 1310
RING, HYDROVAC, piston packing expander 1112
RING, inner, torque converter clutch piston 0225

ALPHABETICAL INDEX

RING, outer, torque converter clutch piston 0225
RING, power cylinder piston 1308
RING, steering gear pump 1309
RING, torque converter reaction clutch retaining 0225
RING, trans., sealing, front pump housing 0823
RING, trans., shaft and cage oil 0817
RING, transmission, high range clutch piston 0820
ROD, accel. rod to engine cross shaft 0312
ROD and ENDS, reach 1312
ROD, back-up lamp switch oper. 0632
ROD, bell crank to carburetor 0312
ROD, bell crank to trans. 0854
ROD, brake pedal to m/c 1109
ROD, clutch oper. shaft to release shaft lever 0206
ROD, cross shaft to trans. 0312
ROD, door lock push 2317
ROD, gearshift 0760
ROD, hand brake, rear cable adjusting 1110
ROD, hood hinge tie 1620
ROD, hood lock operating 1622
ROD ONLY, knuckle tie 1207
ROD, power cylinder piston to rack 1308
ROD, right vent. control, fender 2310
ROD, shaft lever to bell crank control 0854
ROD, starter cut-out and back-up lamp switch 0853
ROD w/ENDS, knuckle tie 1207
ROLLER, countershaft, gear cluster bearing,
transmission 0703
ROLLER, OD., FW clutch cam 0722
ROLLER, trans., planetary pinion bearing (pkg.) 0817
ROLLER, transmission, main shaft front bearing 0702
ROOF PANEL ASSY. 2360
ROOF RAIL and DRIP MOULDING KIT, right 2360
ROOF RAIL and DRIP MOULDING KIT, left 2360
ROTOR and SHAFT KIT, trans., front oil pump 0823
ROTOR, distributor 0601
ROTOR, steering gear pump 1309
ROTOR, trans., front oil pump 0823
ROTOR, trans., front pump -
(use 6484523 rotor & shaft kit) 0823
RUN, left r/q window 2324
RUN, right r/q window 2324

S

SCOOP, trans., shaft and cage oil 0817
SCREEN, HYDROVAC, control valve body 1112
SCREEN, left kick pad 2309
SCREEN, radio grille 2313
SCREEN, right ventilator 2310
SCREEN, steering gear pump reservoir 1309
SEAL, bell crank bracket 1209
SEAL, bushing grease, upper control arm 1204
SEAL, bushing, lower control arm pivot 1204
SEAL, clutch pedal hole 2339
SEAL, HYDROVAC, large, hydraulic cylinder 1112
SEAL, HYDROVAC, push rod - leather
(located in end plate) 1112
SEAL, HYDROVAC, small, hydraulic cylinder rubber . 1112
SEAL, power cylinder, inner, adapter "O" ring 1308
SEAL, power cylinder, outer, adapter "O" ring 1308
SEAL, push rod - rubber (located between vacuum . . 1112
SEAL, reach rod end grease 1312
SEAL, steer. gear control valve "O" ring 1302
SEAL, steering gear pressure hose union, valve end 1309
SEAL, steering gear pressure hose union, pump end 1309
SEAL, steering gear pump ring to body and cover . . . 1309
SEAL, steering gear return hose union, pump end . . 1309
SEAL, tie rod end ball stud 1207
SEAL, torque converter clutch housing to pump 0115
SEAL, torque converter housing 0230
SEAL, trans., brake band adjusting screw 0828
SEAL, trans., manual valve operating shaft 0832
SEAL, trans., reverse brake piston 0827
SEAL, trans., throttle valve operating inner lever 0832
SEAL, transmission, high range clutch piston 0820
SEAL, universal joint cross bearing - rubber 0901
SEAL, valve to power cylinder pipes elbow "O" ring . . 1308
SEAL, water pump 0505
SEAL, window regulator to inner panel 2320
SEALED BEAM UNIT, head lamp 0617
SEALED BEAM UNIT, spotlight 0633
SEAT BELT KIT AC27
SEAT, front shock absorber grommet 1801
SEAT, steering, jacket bearing spring 1305
SEAT, steering post jacket bearing spring 1305
SEAT, trans., control body throttle valve spring 0832
SEAT, trans., high speed governor valve spring 0830
SEAT, valve spring 0103
SEPARATOR, door inside handle 2317
SEPARATOR, handle to foundation, r/q window 2324
SEPARATOR, handle to trim foundation, door window 2320
SHACKLE, left, rear spring - LHC 1520
SHACKLE, right, rear spring - LHC 1520
SHAFT and BEARING, water pump 0505
SHAFT and BRACKET, door vent. handle 2321
SHAFT and BUSHING, torque converter pump 0225
SHAFT and GEARS, transmission 0702
SHAFT and LEVER, OD. shift 0725
SHAFT and LEVERS, clutch operating 0206
SHAFT and PINION, spotlight handle 0633
SHAFT and WASHER, bell crank 1209
SHAFT and WORM w/BALL NUT, steering gear 1304
SHAFT ASSEMBLY, trans., planetary 0817
SHAFT, clutch pedal 0205
SHAFT, control rod bell crank 0854
SHAFT, diff. pinion 1004
SHAFT, gearshift tubular 0756
SHAFT less WEIGHTS, dist. 0601
SHAFT, lower control arm pivot 1204
SHAFT, lower, pump drive 0116
SHAFT, main, transmission 0702
SHAFT, OD. 0721
SHAFT, oil pump idler gear 0116
SHAFT, R/A 1002
SHAFT, steering gear cam lever 1306
SHAFT, steering gear pump drive 1309
SHAFT, trans., control body throttle valve operating . 0832
SHAFT, trans., low brake band lever 0828
SHAFT, trans., manual valve operating 0832
SHAFT, trans., output 0814
SHAFT, trans., planetary pinion 0817
SHAFT, trans., reverse brake band lever 0828
SHAFT, trans., selector lever tubular 0850
SHAFT, transmission, input 0814
SHAFT, transmission, reverse idler gear 0704
SHAFT, transmission, selector lever tubular 0850
SHAFT, upper control arm pivot 1204
SHAFT, upper, oil pump drive 0116
SHAFT w/BUSHING, control arm stabilizer 1205
SHAFT w/CORE, speedometer 1716
SHAFT w/BUSHING, torque converter reactor 0225
SHAFT w/PLUGS, valve rocker arm 0103
SHAFT, w/s wiper motor output 2349
SHELF, rear seat back 2360
SHIELD, brake pedal protector 2338
SHIELD, frame, inner, pedal splash 1507
SHIELD, inner, brake pedal splash 1507
SHIM, bell crank adjusting 1209
SHIM, cyl. head gasket 0102
SHIM, diff. bearing adjusting 1004
SHIM, front fender to cowl 1601
SHIM, inlet manifold gasket 0109

ALPHABETICAL INDEX

SHIM, power cylinder rack guide 1308
SHIM, R/A-pinion adjusting 1005
SHIM, R/A shaft bearing adjusting 1002
SHIM, rear fender to rear pillar 1604
SHIM, steer. knuckle 1202
SHIM,, steering gear housing top cover 1302
SHIM, steering gear shaft adjusting screw 1306
SHOCK ABSORBER, front 1801
SHOCK ABSORBER, rear 1801
SHOE, gearshift low and rev. (aka fork) 0747
SHROUD, fan 0506
SIGNAL LIGHTS KIT, directional 0621
SILENCER, door remote control - felt 2317
SLEEVE, accelerator push rod - rubber 0312
SLEEVE and TUBE, OD. control 0732
SLEEVE, clutch pedal shaft lubrication 0205
SLEEVE, gearshift, inner shift lever interlock 0747
SLEEVE, oil pump drive shaft 0116
SLINGER, crankshaft oil 0105
SLINGER, generator, drive end plate 0608
SLINGER, R/A pinion bearing oil 1005
SLINGER, transmission, pinion rear bearing oil 0705
SLINGER, water pump shaft 0505
SNAP RING, retaining, For Hydrovac model 1112
SNAP RING, universal joint cross bearing 0901
SOCKET and CABLE, trans., selector indicator lamp 0850
SOCKET and CABLES, parking and signal lamp 0618
SOCKET and CABLES, tail lamp 0619
SOCKET w/BRACKET and LOOM, license lamp bulb 0620
SOLENOID, OD. 0731
SOLENOID VALVE, anti-creep 1106
SPACER and WASHER KIT,
gear cluster bearing rollers, transmission 0703
SPACER, camshaft timing sprocket 0104
SPACER, dist. timer camshaft 0601
SPACER, door reg. to foundation - wood,
electric window 2320
SPACER, front spring - left side 1510
SPACER, gearshift, shift levers 0759
SPACER, horn push button shock pad 1310
SPACER, OD. shaft rear bearing 0721
SPACER, rear shock absorber bushing 1801
SPACER, starter motor armature 0606
SPACER, torque converter reactor shaft thrust 0225
SPACER, trans., front oil pump rotor 0823
SPACER, transmission, main shaft front bearing 0702
SPARK MODIFIER (dist) 0601
SPEAKER KIT, rear seat AC12
SPEEDOMETER (head) 1716
SPOTLIGHT ASSEMBLY 0633
SPRAG, torque converter reaction clutch 0225
SPRING and BEARING, door vent. lower pivot tension 2321
SPRING, bowl fuel filter support 0304
SPRING, brake pedal pullback 1108
SPRING, brake shoe adjusting screw 1101
SPRING, brake shoe return (painted green) 1101
SPRING, brush, electric window 2320
SPRING, center and rear, left door tension 2320
SPRING, center and rear, right door tension 2320
SPRING, clutch operating shaft thrust 0206
SPRING, clutch pedal, pull back 0204
SPRING, clutch release bearing collar 0203
SPRING, compartment door hinge 2313
SPRING, control valve seat - For Hydrovac 1112
SPRING, door inside, remote control to trim foundation 2317
SPRING, frame roller center wheel tension,
door window 2320
SPRING, front 1510
SPRING, front, gas filler door 1604
SPRING, front seat pullback 2327
SPRING, front tension, door window 2320
SPRING, fuel pump rocker arm 0301
SPRING, gearshift, inner shift lever interlock 0747
SPRING, gearshift, shaft 0756
SPRING, generator brush 0608
SPRING, hand brake, bell crank pullback 1110
SPRING, hood hinge tie rod tension 1620
SPRING, hood lock latch lever pull back 1622
SPRING, hood top hinge 1620
SPRING, hood top lift 1622
SPRING, horn push button 1310
SPRING, hub cover retaining 1402
SPRING, HYDROVAC, control valve seat -
For Hydrovac models No. 1112
SPRING, HYDROVAC, valve poppet 1112
SPRING, left, front seat adj. track lock 2327
SPRING, left ventilator lid link tension 2310
SPRING, OD., FW clutch roller retainer 0722
SPRING, OD. shift rail fork 0725
SPRING, OD. shift rail reverse lock up return 0725
SPRING, oil pressure relief valve 0117
SPRING, rear, gas filler door 1604
SPRING, regulator to foundation, door window 2320
SPRING, regulator to foundation, r/q window 2324
SPRING, right, front seat adj. track lock 2327
SPRING, right ventilator door link 2310
SPRING, right ventilator lid link tension 2310
SPRING SET, dist. timer weight 0601
SPRING, signal switch plate tension 0621
SPRING, spark modifier 0601
SPRING, starter motor brush 0606
SPRING, steer. gear control valve centering 1302
SPRING, steering gear pressure control valve 1309
SPRING, steering gear reservoir screen 1309
SPRING, steering post jacket bearing 1305
SPRING, throttle return 0312
SPRING, torque converter reaction clutch sprag 0225
SPRING, trans., control body direct shift valve piston 0832
SPRING, trans., control body direct shift throttle valve 0832
SPRING, trans., control body low high shift valve . . . 0832
SPRING, trans., control body modulating valve 0832
SPRING, trans., control body reverse shuttle valve . . 0832
SPRING, trans., control body throttle valve idle 0832
SPRING, trans., control body throttle valve 0832
SPRING, trans., high speed governor valve 0830
SPRING, trans. parking lock gear lever 0837
SPRING, trans., shaft and cage damper 0817
SPRING, transmission, high range clutch piston 0820
SPRING, vacuum piston return - for Hydrovac models 1112
SPRING, valve 0103
SPRING, valve lifter cover baffle 0103
SPRING, valve rocker arm 0103
SPRING, vertical guide, r/q window 2324
SPRING w/RETAINER, m/c piston 1104
SPRING w/BUSHINGS, rear 1518
SPRING, w/s wiper motor brush 2349
SPRING WASHER, trans., reverse brake piston 0827
SPRING, window regulator balance 2320
SPROCKET, camshaft timing chain 0104
SPROCKET, crankshaft timing chain 0105
STARTER MOTOR, assembly 0606
STEERING GEAR ASSY. 1301
STEERING GEAR ASSY. 1301
STOP, door window 2320
STOP, front seat back frame 2327
STOP, m/c piston 1104
STOP, starter clutch and drive 0606
STOP, window bracket 2320
STRAINER, oil 0116
STRAP, m/c side support 1104
STRAP, muffler support (rear of muffler) 0402
STRAP, outlet pipe support 0403

ALPHABETICAL INDEX

STRIKER, left door lock 2317
STRIKER, right door lock 2317
STRIKER, weatherstrip, door window 2320
STUD, dist. terminal 0601
STUD, front seat back side hinge pivot 2327
STUD, propeller, to frame 0902
STUD, r/q window vertical guide 2324
STUD, wheel hub 1402
SUN GEAR, front, transmission, planetary 0817
SUN GEAR, trans., front, planetary 0817
SUN GEAR, trans., rear, planetary 0817
SUN SHIELD, left 2344
SUN SHIELD, right 2344
SUPPORT, front shock absorber lower 1801
SUPPORT, gearshift, lever 0756
SUPPORT, left, lower control arm to king pin 1204
SUPPORT, muffler (rear of muffler) 0402
SUPPORT, outlet pipe 0403
SUPPORT, propeller, shaft 0902
SUPPORT, radiator core 0503
SUPPORT, right, lower control arm to king pin 1204
SUPPORT, trans. parking lock gear lever 0837
SUPPORT, shift selector lever 0850
SUPPORT, steering gear pump 1309
SUPPORT, steering gear pump 1309
SUPPORT, trans., selector lever 0850
SUPPORT, transmission, selector lever 0850
SWITCH and CABLE, spotlight 0633
SWITCH and CABLES, signal lights 0621
SWITCH, back-up lamp 0632
SWITCH, front seat adjuster, electric seat 2327
SWITCH, glove compartment light AC13
SWITCH, head lamp, foot dimmer 0615
SWITCH, instrument lamp 0615
SWITCH, left door (1-button) Chrome 2320
SWITCH less CIRCUIT BREAKER, wiper 2349
SWITCH less LOCK and KEYS, ignition and starting 0602
SWITCH, lighting 0615
SWITCH, OD. accelerator kickdown 0731
SWITCH, right door (1-button) Chrome 2320
SWITCH, starter (solenoid) 0607
SWITCH, starter cut-out and back-up lamp 0853
SWITCH, stop lamp 0615
SWITCH w/FUSE, climatizer AC1-
SWITCH w/FUSE, defroster AC1-
SWITCH, w/s wiper motor parking 2349
SYNCHRONIZER, COMPLETE, transmission 0702

T

TACHOMETER and CABLE 1720
TANK, gasoline - 18 gal. 0307
TAPPET or LIFTER (Hydraulic) 0103
TEE and BRACKET, front brake pipe 1107
TEE, rear brake pipe (R/A housing) 1107
TERMINAL, water temperature gage 0102
THERMOSTAT, engine 0504
THERMOSTAT, manifold heater valve 0109
THRUST BLOCK, R/A shaft 1002
THRUST PLATE, timing sprocket 0104
THRUST WASHER, diff. pinion 1004
THRUST WASHER, high range clutch hub 0820
THRUST WASHER, lower, bell crank 1209
THRUST WASHER, lower, dist. shaft 0601
THRUST WASHER, side bevel gear, diff. 1004
THRUST WASHER, starter clutch and drive 0606
THRUST WASHER, torque converter 0225
THRUST WASHER, torque converter reaction clutch 0225
THRUST WASHER, torque converter reactor shaft . . 0225
THRUST WASHER, trans., planetary pinion 0817
THRUST WASHER, trans., planetary ring gear 0817
THRUST WASHER, trans., planetary short pinion rear 0817
THRUST WASHER, upper, large, dist. shaft 0601
THRUST WASHER, upper, small, dist. shaft 0601
TOP, hood - stripped 1620
TRACK COMPLETE, left front seat adj. 2327
TRACK COMPLETE, right front seat adj. 2327
TRANSMISSION ASSY. (w/OD.) 0700
TRANSMISSION ASSY. ULTRAMATIC 0800B
TRAY, ash receiver 2315
TRUNK and UTILITY LIGHT EQUIPMENT AC30
TUBE and ELBOW, HYDROVAC,
valve body to cylinder pipe hose 1112
TUBE and WIRE, climatizer, control to valve AC1-
TUBE, auto, choke heater 0302
TUBE, breather 0102
TUBE, front seat torque, electric 2327
TUBE, HYDROVAC, hydraulic cylinder 1112
TUBE, oil level gage 0115
TUBE, oil pan filler 0115
TUBE, oil pan level gage 0115
TUBE, trans., front pump oil jumper 0823
TUBE, trans., long, low brake oil jumper 0827
TUBE, trans. oil filler 0811
TUBE, trans., rear oil pump suction jumper 0824
TUBE, trans., rear oil pump discharge jumper 0824
TUBE, trans., reverse brake oil jumper 0827
TUBE, trans., short, low brake oil jumper 0827
TURBINE, first, torque converter 0225

U

U-BOLT and SADDLE ASSY. (front of muffler) 0402
U-BOLT and SADDLE ASSY. (rear of muffler) 0402
UNION, steering gear pressure hose, valve end 1309
UNION, steering gear pressure hose, pump end 1309
UNION, steering gear return hose, valve end 1309
UNION, steering gear return hose, pump end 1309

V

VALVE ASSY., COMPLETE, manifold heater 0109
VALVE ASSY., steering gear pump pressure control . 1309
VALVE ASSY., tubeless tire 1402
VALVE COMPLETE, m/c 1104
VALVE, exhaust - std. 0103
VALVE, inlet - std. 0103
VALVE, oil pressure relief 0117
VALVE, steer. gear control valve pump by-pass 1302
VALVE, steer. gear hydraulic control 1302
VALVE, trans., control body direct shift throttle 0832
VALVE, trans., control body direct shift 0832
VALVE, trans., control body low high shift 0832
VALVE, trans., control body modulating 0832
VALVE, trans., control body reverse shuttle 0832
VALVE, trans., control body throttle 0832
VALVE, trans., control body throttle limit 0832
VALVE, trans., high speed governor 0830
VALVE, trans., lower rear control body manual 0832
VALVE, trans., pump check 0832
VALVE w/LEVER, NoRol 1105
VANE KIT, steering gear pump rotor 1309
VENTILATOR, left door 2321
VENTILATOR, right door 2321
VENTILATOR w/OUTER FRAME, left door 2321
VENTILATOR w/OUTER FRAME, right door 2321
VISOR, windshield AC47
VOLTAGE REGULATOR, generator 0608

W

WASHER and RETAINER, front wheel grease 1408
WASHER and RETAINER, outer, R/A shaft bearing oil seal 1002
WASHER, armature drive end thrust, electric window 2320
WASHER, armature thrust, electric window 2320
WASHER, clutch operating shaft (felt) 0206

ALPHABETICAL INDEX

WASHER, door window regulator arm stud 2320

WASHER, gear timing sprocket cover oil
(incls. retainer) 0104
WASHER, generator, drive end plate - felt 0608
WASHER, HYDROVAC 1112
WASHER, HYDROVAC, hydraulic piston stop 1112
WASHER, HYDROVAC, vacuum piston stop 1112
WASHER KIT, windshield AC49
WASHER, outer-R/A shaft bearing oil-felt 1002
WASHER, propeller, shaft sleeve grease 0900
WASHER, spring torque converter reaction clutch . . 0225
WASHER, steering gear shaft oil 1306
WASHER, torque converter reaction clutch 0225
WASHER, wheel bearing nut lock 1407
WATER PUMP and FAN HUB 0505
WEATHERSEAL, front, left, r/q window 2324
WEATHERSEAL, front, right, r/q window 2324
WEATHERSEAL, front side, door window left 2320
WEATHERSEAL, front side, door window right 2320
WEATHERSEAL, lower inner, door window 2320
WEATHERSEAL, lower outer, door window 2320
WEATHERSEAL, lower, r/q window 2324
WEATHERSEAL, ventilator lid - rubber 2310
WEATHERSTRIP, back window - rubber 2325
WEATHERSTRIP, door window glass channel - rubber 2320
WEATHERSTRIP, front, left door opening 2316
WEATHERSTRIP, front, left door vent. 2321
WEATHERSTRIP, front, right door opening 2316
WEATHERSTRIP, front, right door vent. 2321
WEATHERSTRIP, head lamp to fender - rubber 0617
WEATHERSTRIP, left, lower extension, door window 2321
WEATHERSTRIP, lower, door opening 2316
WEATHERSTRIP, rear, door vent. 2321
WEATHERSTRIP, rear, left door opening 2316
WEATHERSTRIP, rear, right door opening 2316
WEATHERSTRIP, right, lower extension, door window 2321
WEATHERSTRIP, upper, front, left door 2316
WEATHERSTRIP, upper, front, right door 2316
WEATHERSTRIP, upper, left door open. (flipper type) 2320
WEATHERSTRIP, upper, right door open. flipper type 2320
WEIGHT, dist. timer 0601
WEIGHT, wheel balance 1402
WHEEL, prime - 15 x 5.00K 1402
WHEEL, steer. - white 1310
WICK, HYDROVAC, vacuum piston 1112
WINDOW w/FRAME, left door 2320
WINDOW w/FRAME, left rear quarter 2324
WINDOW w/FRAME, right door 2320
WINDOW w/FRAME, right rear quarter 2324
WIRE and FERRULE, track connecting -
manual front seat 2327

Y

YOKE, universal joint slip 0901

1956 STUDEBAKER GOLDEN HAWK INFORMATION and TORQUE SPECIFICATIONS

SPECIFICATIONS
BODY

Model	Golden Hawk
Style	K-Hardtop convertible for five passengers
Wheelbase	120-1/2" (306,1 cm.)
Overall length of car	203-15/16" (518,0 cm.)
Overall width of car	70-7/16" (178,9 cm.)
Overall height	56-5/16" (143,0 cm.)
Weight	3360 lbs.

BRAKE SYSTEM

Make	Wagner
Type	Self-Centering Self-Energizing
Brake Lining	Marshall-Eclipse
Drum type	Air Cooled Rib
Drum size--front	11" (279,4 mm.)
--rear	10" (254 mm.)
Lining--length per wheel--front	12" (305 mm.)
--rear	10-29/32" (277 mm.)
--width--front	2-1/4" (57,2 mm.)
--rear	2" (50,8 mm.)
--thickness	3/16" (4,76 mm.)

(Front Wheel secondary shoe lining is 7/32" (5,56 mm.) thick.

Total braking area	195.25 sq. in. (1259,7 sq. cm.)
Brake power--front	62%
--rear	38%
Parking brake lever operates	Rear Service Brakes
Backing plate bolt nut--size and thread	3/8" - 24
--torque required	35-40 ft-lb (4,8-5,5 kg-m)

CLIMATIZER, DEFROSTER

Hose lengths

15/16" OD Hose	
Defroster tee-to-heater core	79" (200,7 cm.)
Heater core-to-defroster tee	55" (129,7 cm.)
Defroster tee-to-water pump	37" (94 cm.)
Heater valve-to-defroster tee	2-1/2" (6,4 cm.)
Water pump manifold-to-heater valve	15" (38,1 cm.)
5/8" OD Hose Defroster-to-tee	27-1/2" (69,9 cm.)
Tee-to-defroster	20" (50,8 cm.)

CLUTCH

Make	Long
Vibration damper	Yes
Clutch driven discs	1
Clutch facings	Woven Asbestos
Facing inside diameter	7" (177,8 mm.)
Facing outside diameter	11" (279,4 mm.)
Facing thickness	.125" (3,175 mm.)
Facings required	2
Pedal free play	1-1/2" (38,1 mm.)
Clutch spring pressure	1467
Number of springs	8

	SIZE & THREAD	TORQUE REQUIRED
Pressure plate cover-to-flywheel screw	3/8" - 16	25 - 28 ft-lb (3,5 - 3,9 kg-m)
Housing-to-cylinder block screw	3/8" - 16	25 - 30 ft-lb (3,5 - 4,1 kg-m)

COOLING SYSTEM

Capacity	25 U. S. Quarts 20.8 Imperial Quarts 23.7 Liters
Radiator core--make	McCord-Modine
--type	Cellular-Tubular Fin and Tube
--frontal area	443 sq. in. (2858 sq cm.)
Radiator outlet hose--inside diameter	1-3/4" (44,5 mm.)
--type	Molded Elbow
Radiator inlet hose--inside diameter	1-1/2" (38,1 mm.)
--type	Molded Elbow
Fan belt--length (outside)	56-11/16" (144,1 cm.)
--width (nominal)	.380" (9,652 mm.)
--angle of vee (pulley)	36°

	SIZE & THREAD	TORQUE REQUIRED
Fan-to-water pump hub screw	1/4" - 28	90 - 100 in-lb (1,04 - 1,13 kg-m)
Water outlet-to-water manifold screws	3/8" - 16	25 - 30 ft-lb (3,5 - 4,1 kg-m)
Water pump-to-manifold screw	5/16" - 18	15 - 18 ft-lb (2,1 - 2,5 kg-m)

ELECTRICAL SYSTEM

IGNITION

Coil--Make	Auto-Lite
--Model	CAD 4001
Resistor--Make	Auto-Lite
--Model	PU 4001
--Resistance	.665 - .735 Ohms
Distributor--Make	Auto-Lite
--Model	IBJ-4001C (IBJ-4001D, IBJ-4001E)
Centrifugal Advance Maximum--Crankshaft degrees	32°
Vacuum advance maximum Crankshaft degrees	22°
Spark timing	5° BTDC
Distributor point gap	.016" (0,41 mm.)
Cam angle	28° - 34°
Distributor breaker arm tension	17 - 20 oz. (482 - 567 grams)
Firing order	1-8-4-3-6-5-7-2
Spark plug--Make	Champion
--Type	N8-67B
--Gap	.033" - .038" (0,84 - 0,96 mm.)
--Thread	14 mm

1956 STUDEBAKER GOLDEN HAWK INFORMATION and TORQUE SPECIFICATIONS

BATTERY	
Make	Willard
Model	HDW-2SM-60
Voltage	12
Amp. hours	60
Plates per cell	9
Specific gravity	1.260
Terminal grounded	Negative
STARTER	
Starter Motor--Make	Auto-Lite
--Model	MDF-6008
Brush spring tension	42 - 53 oz. (1190 - 1503 gr.)
No. of pinion teeth	9
No. of flywheel teeth	182
GENERATOR	
Make	Auto-Lite
Model	GJC-7002-F
Brush spring tension	18 - 36 oz. (510 - 1021 gr.)
Maximum Controlled Charging Rate	
Temperature	70° F. (21° C)
Amperes	28 - 32
Voltage	14.3 - 14.9
Current and Voltage regulator--Make	Auto-Lite
--Model	VRX-6008A
Cut out relay--	
Voltage at closing	13.0 - 13.75
Temperature (degrees)	70° F. (21° C.)
Air gap	.031" - .034" (0,79 - 0,86 mm.)
Voltage regulator--	
Volts	14.3 - 14.9
Temperature (degrees)	70° F. (21° C.)
Air gap	.048" - .052" (1,22 - 1,32 mm.)
Current regulator--	
Amperes	28 - 32
Temperature (degrees)	70° F. (21° C.)
Air gap	.048" - .052" (1,22 - 1,32 mm.)

LAMP BULBS LOCATION	**VOLTAGE AND NUMBER**
Headlight	12-16 Sealed Beam No. 5400
Parking	12-16 Mazda No. 1034
Tail/Stop	12-16 Mazda No. 1034
Instruments	12-16 Mazda No. 57
Trunk	12-16 Mazda No. 67
Dome	12-16 Mazda No. 1004
License plate	12-16 Mazda No. 67
High beam indicator	12-16 Mazda No. 53
Directional signal--Front	12-16 Mazda No. 1034
--Rear	12-16 Mazda No. 1034
--Tell-Tale	12-16 Mazda No. 53
Back-up light	12-16 Mazda No. 1073

Glove compartment	12-16 Mazda No. 57
Hand brake warning light	12-16 Mazda No. 1004
Spot light	12-16 Mazda No. 4405
Radio	12-16 Mazda No. 1891
Clock	12-16 Mazda No. 57
Cigar lighter	12-16 Mazda No. 53
Oil pressure indicator	12-16 Mazda No. 53
Generator charge indicator	12-16 Mazda No. 53
Auto transmission selector indicator	12-16 Mazda No. 53

CIRCUIT BREAKER AND FUSES	AMPERES	LOCATION
Circuit Breaker--		
Head, parking, tail & instrument lights	18	On headlight switch
Body and stop lights	15	Below headlight switch on instrument panel
Windshield wiper	5	In wiper switch
Seat adjuster	20	Upper left cowl panel
Window lift	20	Upper left cowl panel
Fuses--		
Overdrive	20	In relay on dash panel
Radio	9	In lead behind instrument panel
Directional signal	14	In bracket behind inst. panel
Electric clock	3	In lead behind instrument panel
Climatizer & Defroster--C and K	14	On climatizer and defroster switch

ENGINE - SKYPOWER 352

Number of cylinders		8
Cylinder bore		4" (101,60 mm.)
Stroke		3-1/2" (88,90 mm.)
Piston displacement--cu. in.		352
--cu. cm.		5768
Horsepower (N.A.C.C.)		51.2
Compression ratio--standard		9.2 to 1 *(9.5 to 1?)*
Standard compression pressure at cranking speed	(approx.) 120 lbs.	(54,43 kgs.) minimum at 150 rpm
Firing order		1-8-4-3-6-5-7-2

CRANKSHAFT

Vibration damper type	Non-Bonded Rubber
End thrust carried on	(No. 5) Rear Bearing
Crankshaft end play	.0035" - .0085" (0,089 mm. - 0,216 mm.)
Main bearing--type	Replaceable
--material	Nos. 1, 2, 3, 4 - Copper-Lead; No. 5 - Babbitt
--removable from below	Yes
Main bearing clearance	.0005" - .0025" (0,013 mm. - 0,064 mm.)
Main bearing journal diameter	2.4990" (63,47 mm.)
Main bearing effective length--No. 1	.950" (24,1 mm.)
--No. 2	.950" (24,1 mm.)
--No. 3	.950" (24,1 mm.)
--No. 4	.950" (24,1 mm.)
--No. 5	1.736" (44,1 mm.)
Crankshaft sprocket--material	Steel, Heat Treated

CAMSHAFT

Camshaft drive	Silent Chain

Camshaft bearing diameter--No. 1	1.9685" - 1.9715" (50,000 - 50,076 mm.)
--No. 2	1.9370" - 1.9400" (49,600 - 49,676 mm.)
--No. 3	1.9055" - 1.9095" (48,400 - 48,476 mm.)
--No. 4	1.8740" - 1.8770" (47,600 - 47,676 mm.)
--No. 5	1.4365" - 1.4395" (36,487 - 36,5633mm.)
--length--Nos. 1 - 4	.740" - .760" (18,796 - 19,304 mm.)
--No. 5	.990" - 1.010" (25,146 - 25,654 mm.)
Camshaft bushing clearances	.0005" - .0045" (0,013 - 0,114 mm.)
Camshaft end play	.004" - .006" (0,102mm. - 0,152 mm.)
Camshaft sprocket--material	Cast Alloy Iron
Timing chain--make	Morse
--number of links	64
--width	1.000" (25,400 mm.)
--pitch	.375" (9,525 mm.)

PISTONS AND RINGS

Piston material	Aluminum Alloy
Piston clearance	Selective Feeler Fit-See Text
Oil ring--number per piston	1
--width	Each Rail .0245" (0,622 mm.)
--gap	.015" to .050" (0,381 - 1,27 mm.)
--side clearance	.0015" - .005" (0,038 mm. - 0,127 mm.)
Compression ring--number	2
--width	.078" (1,981 mm.)
--gap	019" (0,457 mm.)
--side clearance	mm. - 0,127 mm.) .0015" - .005" (0,038

RODS AND PINS

Piston pin--diameter	.9803" (24,90 mm.)
--length	3.250" (82,55 mm.)
--type	Floating
--bushing	Bronze (In Rod)
Piston pin clearance--in piston	.0000" - .0002" (0,00 mm. - 0,0051 mm.) with piston at 70° - 160° F. (21° - 71° C.)
--in rod	.0000" - .0004" (0,00 mm. - 0,0101 mm.)
Direction of pin offset	.0625" (1,587 mm.) Toward Major Thrust Side
Crank pin journal--diameter	2.250" (57,150 mm.)
Connecting rod bearing--effective length	.939" (23,851 mm.) (2 Rods Side by Side)
--type	Removable
--material	Steel Backed Microbabbitt Lined
Connecting rod bearing clearance	.0005" - .0025" (0,0127 mm. - 0,064 mm.)
Connecting rod side clearance	.003" - .011" (0,076 mm. - 0,279 mm.) (Two Rods)
Connecting rod--center-to-center--length	6.7181" (170,64 mm.)
Rods and pistons removed	From Top

VALVES

Lifter type	Hydraulic
Rocker ratio	1.6 to 1
Operating valve clearance	Automatic Take-Up
Valve spring pressures--open	173 lbs. to 187 lbs at 1.375" (78,4 kg. to 84,8 kg. at 34,9 mm.)
--closed	87 lbs. to 97 lbs at 1.750" (39,4 kg. to 43,9 kg. at 44,4 mm.)
Valve lift	.398" (10,009 mm.)
Inlet valve--material	Silichrome Steel
--overall length	5.712" (145,08 mm.)

--overall head diameter	2.000" (50,8 mm.)
--seat angle	29°
--stem diameter	.3725" (9,487 mm.)
--stem clearance	selected to .001" - .002" (0,025 mm. - 0,051 mm.)
Exhaust valve--material	Austenitic Steel
--overall length	5.690" (144,53 mm.)
--overall head diameter	1.687" (42,85 mm.)
--seat angle	44.5°
--stem diameter	.3715" (9,436 mm.)
--stem clearance	selected to .002" - .003" (0,051 mm. - 0,076 mm.)
Timing	
Intake opens	14° before U.D.C.
Intake closes	62° after L.D.C.
Exhaust opens	54° before L.D.C.
Exhaust closes	18° after U.D.C.

	SIZE & THREAD	TORQUE REQUIRED
Camshaft thrust plate fastening screws	5/16" - 18	15 - 18 ft-lb (2,1 - 2,5 kg-m)
Connecting rod cap bolt nut	3/8" - 24	40 - 45 ft-lb (5,5 - 6,9 kg-m)
Crankshaft main bearing cap screw	1/2" - 13	90 - 95 ft-lb (12,4 - 13,1 kg-m)
Crankshaft vibration damper screw	3/4" - 16	130 - 150 ft-lb (18,0 - 20,7 kg-m)
Cylinder head screw	7/16" - 14	55 - 60 ft-lb (7,6 - 8,3 kg-m)
Exhaust pipe-to-exhaust manifold stud nut	3/8" - 24	18 - 24 ft-lb (2,5 - 2,8 kg-m)
Flywheel-to-crankshaft bolt nut	7/16" - 20	55 - 60 ft-lb (7,6 - 8,3 kg-m)
Fuel pump eccentric retainer bolt	3/8" - 16	25 - 30 ft-lb (3,5 - 4,1 kg-m)
Inlet manifold-to-block screw	3/8" - 16	25 - 30 ft-lb (3,5 - 4,1 kg-m)
Exhaust manifold-to-block stud nut	3/8" - 16	25 - 30 ft-lb (3,5 - 4,1 kg-m)
Oil filter cover screw	7/16" - 20	20 - 25 ft-lb (2,8 - 3,5 kg-m)
Oil pan drain plug	5/8" - 18	25 - 30 ft-lb (3,5 - 4,1 kg-m)
Oil pan screw	5/16" - 18	15 - 18 ft-lb (2,1 - 2,5 kg-m)
Rocker arm cover nuts	5/16" - 18	25 - 30 in-lb (0,28 - 0,34 kg-m)

(to obtain proper seal, tighten these screws to required torque three successive times.)

Spark plug	14 mm	26 - 30 ft-lb (3,6 - 4,1 kg-m)
Timing gear cover screw or nut	5/16" - 18	13 - 17 ft-lb (1,8 - 2,3 kg-m)
Valve lifter cover screw	5/16" - 18	12 - 15 ft-lb (1,7 - 2,1 kg-m)

(to obtain proper seal, tighten these screws to required torque three successive times.)

1956 STUDEBAKER GOLDEN HAWK INFORMATION and TORQUE SPECIFICATIONS

FRONT SUSPENSION

Front wheel toe-in	1/16" - 1/8" (1,589 mm. - 3,174 mm.)
Caster angle	-1° -- -2-1/2°
(not more than 3/4° degrees variation between wheels)	
Front wheel camber angle	0° - +1°
(1/2° more camber favored on drivers side)	
King pin inclination	5-1/4°
Minimum road clearance	6-15/32" (176,2 mm.)
(at body front pillar crossmember)	
Turning diameter (right)	40' (12,2 m.)
(left)	41' (12,5 m.)
Tread--front	56-11/16" (1439,8 mm.)
--rear	55-11/16" (1414,4 mm.)
Inside wheel angle with outside wheel at 20°	22-1/2° - 23-1/2°

	SIZE & THREAD	TORQUE REQUIRED
Control arm threaded bushings	15/16" - 11	170 ft-lb MIN, (23,5 kg-m)
Control arm rubber bushing cap screws	7/16" - 20	60 - 65 ft-lb (8,3 - 9,0 kg-m)
Power steering gear to frame bracket bolt nut	3/8" - 24	25 - 30 ft-lb (3,5 - 4,1 kg-m)
Power steering unit to gear cap screws	5/16" - 18	20 - 25 ft-lb (2,8 - 3,5 kg-m)
Power steering unit housing cap screws	5/16" - 18	13 - 17 ft-lb (1,8 - 2,3 kg-m)
Power steering unit flange bolt to steering post flange bolt nut	1/4" - 28	12 - 15 ft-lb (1,7 - 2,1 kg-m)
Steering bell crank clamping bolt	3/8" - 24	60 - 65 ft-lb (8,3 - 9,0 kg-m)
Steering bell crank bracket bolt nut	3/8" - 24	40 - 45 ft-lb (5,5 - 6,0 kg-m)
Steering gear arm nut	3/4" - 16	90 - 150 ft-lb (12,4 - 20,7 kg-m)
Steering gear mounting bolt nut	3/8" - 24	35 - 40 ft-lb (4,8 - 5,5 kg-m)
Steering knuckle arm nut	5/8" - 18	80 - 85 ft-lb (11,0 - 11,7 kg-m)
Steering reach rod ball stud nut	1/2" - 20	50 - 55 ft-lb (6,9 - 7,6 kg-m)
Steering wheel nut	13/16" - 20	23 - 27 ft-lb (3,2 - 3,7 kg-m)
Tie rod ball stud nut	1/2" - 20	50 - 55 ft-lb (6,9 - 7,6 kg-m)
Upper control arm inner shaft to frame bolt nut	1/2"-20	75 - 80 ft-lb (10,4 - 11,0 kg-m)
Upper control arm inner shaft bushing cap screw	3/8"-24	32 - 37 ft-lb (4,4 - 5,1 kg-m)
Lower control arm inner shaft to frame bolt nut	7/16"-20	60 - 65 ft-lb (8,3 - 9,0 kg-m)
Lower control arm inner shaft bushing cap screw	1/2"-20	60 - 65 ft-lb (8,3 - 9,0 kg-m)

1956 STUDEBAKER GOLDEN HAWK INFORMATION and TORQUE SPECIFICATIONS

STEERING SYSTEM

Steering gear--type	Cam & Twin Lever or worm & roller
--make	Ross or Saginaw
--ratio (gear)	Ross 18.5-16.5-18.5; Saginaw 19-1
--ratio (overall)	Ross 33.8-24-33.8; Saginaw 20-1
Power steering (optional at extra cost)	
--type	Hydraulic
--make	Saginaw
--ratio	20-1

(see FRONT SUSPENSION for thread size/torque specifications)

GASOLINE SYSTEM

Gasoline tank capacity	18 U. S. Gal. (15 Imp. Gal.) (68.1 liters)
Fuel pump--make	Carter or AC
--model	M-2198-S 4299
--pressure	3-1/2 - 5 p.s.i (0,25 -0,35 kg. per sq. cm.)
Carburetor--make	Carter
--model	WCFB-2394-S
--size	Quad. 1-1/4" (31,8 mm.)

	SIZE & THREAD	TORQUE REQUIRED
Carburetor mounting stud nut	5/16" - 24	15 - 18 ft-lb (2,1 - 2,5 kg-m)
Fuel pump mounting screw	3/8" - 16	25 - 30 ft-lb (3,5 - 4,1 kg-m)

LUBRICATION

Oil pan capacity	5 U. S. Quarts (4.14 Imp. Qts.) (4.73 liters)
Rear axle capacity	3.00 U. S. Pints (2.50 Imp. Pints) (1.43 liters)
Transmission capacity (overdrive)	3.70 U. S. Pints (3.09 Imp. Pints) (1.74 liters)
Transmission capacity (Ultramatic)	11 U. S. Quarts (9.5 Imp. Quarts) (10.9 liters)

PROPELLER SHAFT AND UNIVERSAL JOINTS

Universal joint--make	Spicer
--type	Needle Bearing
--number	3
--lubricate with	Chassis Lubricant (Light Weight)

	SIZE & THREAD	TORQUE REQUIRED
Propeller shaft support screw	3/8" - 24	20-25 ft-lb (2,8 - 3,5 kg-m)
Rear axle flange nut	3/4" - 16	140 - 180 ft-lb (19,3 - 24,8 kg-m)
Transmission flange nut	3/4" - 16	140 - 180 ft-lb (19,3 - 24,8 kg-m)
Universal joint flange U-bolt nuts	5/16" - 24	14 - 17 ft-lb (1,9 - 2,3 kg-m)

REAR AXLE

Make	Salisbury
Model	44-3
Type	Semifloating
Type of drive	Hypoid
Road clearance	8-1/32" (204 mm.)

Lubricant capacity	3.00 U. S. Pints (2.50 Imp. Pints) (1.43 liters)
Lubricant	
Type gear	Hypoid
Backlash-pinion and gear	.003" - .006" (0,076-0,15 mm.)
Standard Gear Ratio	3.92 to 1
--with Overdrive Transmission	3.07 to 1
--with Ultramatic	

	SIZE & THREAD	TORQUE REQUIRED
Bevel drive gear-to-case screw	3/8" - 24	40 - 50 ft-lb (5,5 - 6,9 kg-m)
Differential bearing cap screw	1/2" - 13	70 - 80 ft-lb (9,7 - 11,0 kg-m)
Housing cover screw	3/8" - 16	25 - 30 ft-lb (3,5 - 4,1 kg-m)
Shaft-to-hub nut	1" - 14	170 - 240 ft-lb (23,5 - 33,1 kg-m)

SPRINGS AND SHOCK ABSORBERS

Front spring--type	Coil
Rear springs--size	2-1/2" X 50" (63,5 mm. X 127 cm.)
--standard number of leaves	4
Shackle or bolt lubricant	None
Shackle length	3" (76,2 mm.)
Rear spring front mounting	Rubber bushing
Diameter front eye	1-1/2" (38,1 mm.)
Shock absorbers--make	Houde and Monroe
--type	Directing Acting

	SIZE & THREAD	TORQUE REQUIRED
Rear spring front bolt	7/16" - 20	50 ft-lb (6,9 kg-m)
Rear spring shackle bolt	7/16" - 20	50 ft-lb (6,9 kg-m)
Rear spring U-bolt nut	7/16" - 14	63 - 68 ft-lb (8,7 - 9,4 kg-m)

TRANSMISSION

CONVENTIONAL

Model	**T85 W/O.D.**
Gear Ratio--High	1.0
--Second	1.587
--Low	2.490
--Reverse	3.154
--Overdrive	.722
Capacity	3.7 U. S. Pints (3.08 Imp. Pints) (1.74 liters)
Speedometer Gear Chart (Overdrive)	
--Axle Ratio	3.92
--Tire Size	7:10
--Gear Teeth	6
--Drive Gear No.	1539339
--Pinion Teeth	17
--Pinion No.	536503

	SIZE & THREAD	TORQUE REQUIRED
Transmission case-to-clutch housing screw	7/16" - 14	55 - 60 ft-lb (7,6 - 8,3 kg-m)

1956 STUDEBAKER GOLDEN HAWK INFORMATION and TORQUE SPECIFICATIONS

Model	**Ultramatic**
Capacity	11 U. S. Quarts (9.5 Imp. Quarts) (10.9 liters)
Speedometer Gear Chart (Ultramatic)	
--Axle Ratio	3.07 to 1
--Tire Size	7:10
--Gear Teeth	8
--Gear No.	450308
--No. Pinion Teeth	18
--Pinion No.	450318

	SIZE & THREAD	TORQUE REQUIRED
Transmission assembly screw	3/8" - 16	25 - 30 ft-lb (3,5 - 4,1 kg-m)
Transmission bell housing assembly screw	7/16" - 14	55 - 60 ft-lb (7,6 - 8,3 kg-m)
Transmission bell housing assembly plug	3/8" - 18 Pipe	10 - 12 ft-lb (1,4 - 1,7 kg-m)
Transmission bell housing assembly plug	1/8" - 27 Pipe	8 - 10 ft-lb (1,1 - 1,4 kg-m)
Transmission brake band adjusting screw	5/8" - 18	20 ft-lb
(tighten with a torque of 20 ft lbs. Back off 1.75 turns. Tighten jam nut.)		
Transmission brake band adjusting screw jam nut	5/8"-18	25 - 30 ft-lb (3,5 - 4,1 kg-m)
Transmission brake piston cover screw	No. 10 - 24	20 - 30 in-lb (0,23 - 0,34 kg-m)
Transmission brake piston cover screw	5/16" - 18	15 - 18 ft-lb (2,1 - 2,5 kg-m)
Transmission brake piston cover screw	1/8" - 27 Pipe	8 - 10 ft-lb (1,1 - 1,4 kg-m)
Transmission control assembly screw	5/16" - 18	9 ft-lb (1,3 kg-m)
Transmission control valve starter safety switch	3/4"-16	50 ft-lb (6,9 kg-m)
Transmission control converter relief valve retainer screw	5/16" - 18	9 ft-lb (1,3 kg-m)
Transmission control oil pump selector valve cover screw	No. 10 - 24	20 - 30 in-lb (0,23 - 0,34 kg-m)
Transmission control direct drive valve cover screw	No. 10 - 24	20 - 30 in-lb (0,23 - 0,34 kg-m)
Transmission control throttle valve spring seat screw	No. 10 - 24	20 - 30 in-lb (0,23 - 0,34 kg-m)
Transmission control valve timing cover screw	No. 10-24	20 - 30 in-lb (0,23 - 0,34 kg-m)
Transmission control valve body (upper to lower) screw	1/4"-20x1-3/8	5 ft-lb (0,7 kg-m)
Transmission control valve body (upper to lower) screw	1/4"-20x1-1/8	5 ft-lb (0,7 kg-m)
Transmission control valve body (upper to lower) screw	1/4" - 20	5 ft-lb (0,7 kg-m)
Transmission control valve body (upper to lower) screw	1/4"-20x1-3/4	5 ft-lb (0,7 kg-m)
Transmission control valve body (upper to case) screw	5/16" - 18	9 ft-lb (1,3 kg-m)
Transmission control valve body plug	3/8" - 18 Pipe	10 - 12 ft-lb (1,4 - 1,7 kg-m)
Transmission control valve body separator screw	1/4" - 20	5 ft-lb (0,7 kg-m)
Transmission control valve detent lever set screw nut	5/16" - 24	15 - 18 ft-lb (2,1 - 2,5 kg-m)
Transmission control valve lever (inner) set screw nut	5/16" - 24	15 - 18 ft-lb (2,1 - 2,5 kg-m)
Transmission control valve link screw	No. 10 - 32	20 - 30 in-lb (0,23 - 0,34 kg-m)
Transmission control valve link nut	No. 10 - 32	20 - 30 in-lb (0,23 - 0,34 kg-m)
Transmission control valve starter safety switch	No. 8 - 32	15 - 20 in-lb (0,16 - 0,23 kg-m)

Converter clutch housing screw	3/8" - 16	25 - 30 ft-lb (3,5 - 4,1 kg-m)
Converter oil drain plug	1/8" - 27 Pipe	8 - 10 ft-lb (1,1 - 1,4 kg-m)
Converter outlet valve assembly	3/4" - 16	50 ft lb (6,9 kg-m)
Converter pump screw	5/16" - 18	25 - 30 ft-lb (3,5 - 4,1 kg-m)
Converter pump shaft screw	5/16" - 24	25 - 30 ft-lb (3,5 - 4,1 kg-m)
Converter reactor shaft screw	5/16" - 24	25 - 30 ft-lb (3,5 - 4,1 kg-m)
Converter (first) turbine screw	5/16" - 24	25 - 30 ft-lb (3,5 - 4,1 kg-m)
Converter (second) turbine screw	1/4" - 20	12 - 15 ft-lb (1,7 - 2,1 kg-m)
Transmission front oil pump assembly screw	1/4" - 28	8 - 9 ft-lb (1,1 - 1,3 kg-m)
Transmission governor assembly screw	1/4" - 28	6 ft-lb (0,8 kg-m)
Transmission governor adapter screw	1/4" - 20	8 - 9 ft-lb (1,1 - 1,3 kg-m)
Transmission governor cover screw	1/4" - 20	8 - 9 ft-lb (1,1 - 1,3 kg-m)
Transmission governor pressure take-off plug	1/8" - 27 Pipe	8 - 10 ft-lb (1,1 - 1,4 kg-m)
Transmission oil cooler hose assembly	3/8" - 18	30 ft-lb (4,1 kg-fm)
Transmission oil cooler tube assembly clip bolt	3/8" - 24	25 - 30 ft-lb (3,5 - 4,1 kg-m)
Transmission oil cooler tube assembly clip nut	3/8" - 24	25 - 30 ft-lb (3,5 - 4,1 kg-m)
Transmission oil cooler tube assembly clip screw	3/8" - 16	25 - 30 ft-lb (3,5 - 4,1 kg-m)
Transmission oil cooler assembly elbow (pipe thread)	1/4" - 18	20 - 25 ft-lb (2,8 - 3,5 kg-m)
Transmission oil filler plug (breather type)	3/4"-14 Pipe	18 - 20 ft-lb (2,5 - 2,8 kg-m)
Transmission oil cooler tube assembly nut	5/8" - 18	20 - 25 ft-lb (2,8 - 3,5 kg-m)
Transmission oil pan screw	5/16" - 18	10 - 12 ft-lb (1,4 - 1,7 kg-m)
Transmission oil pan drain plug	5/8" - 18	25 - 30 ft-lb (3,5 - 4,1 kg-m)
Transmission oil strainer assembly screw	5/16" - 18	15 - 18 ft-lb (2,1 - 2,5 kg-m)
Transmission planetary cage screw	5/16" - 24	15 - 18 ft-lb (2,1 - 2,5 kg-m)
Transmission reactor clutch housing assembly lock nut	1/4" - 28	8 - 9 ft-lb (1,1 - 1,3 kg-m)
Transmission reactor clutch housing assembly screw	5/16" - 18	15 - 18 ft-lb (2,1 - 2,5 kg-m)
Transmission rear housing assembly screw	5/16" - 18	15 - 18 ft-lb (2,1 - 2,5 kg-m)
Transmission rear oil pump body assembly screw	5/16" - 18	15 - 18 ft-lb (2,1 - 2,5 kg-m)
Transmission rear oil pump body assembly screw	5/16" - 18	15 - 18 ft-lb (2,1 - 2,5 kg-m)
Transmission rear oil pump body cover plate retaining screw	1/4" - 20	8 - 9 ft-lb (1,1 - 1,3 kg-m)
Transmission speedometer pinion adaptor screw	1/4" - 20	8 - 9 ft-lb (1,1 - 1,3 kg-m)
Transmission universal joint flange nut	3/4" - 16	200 - 225 ft-lb (27,66 - 31,11 kg-m)

1956 STUDEBAKER GOLDEN HAWK INFORMATION and TORQUE SPECIFICATIONS

WHEELS AND TIRES

Tire size	7:10x15
Tire Pressure	26 p.s.i. (1,82 kgs.) front 22 p.s.i. (1,54 kgs.) rear

	SIZE & THREAD	TORQUE REQUIRED
Wheel-to-hub stud nut--size & tread	1/2" - 20	75 - 83 ft-lb (10,4 - 11,5 kg-m)

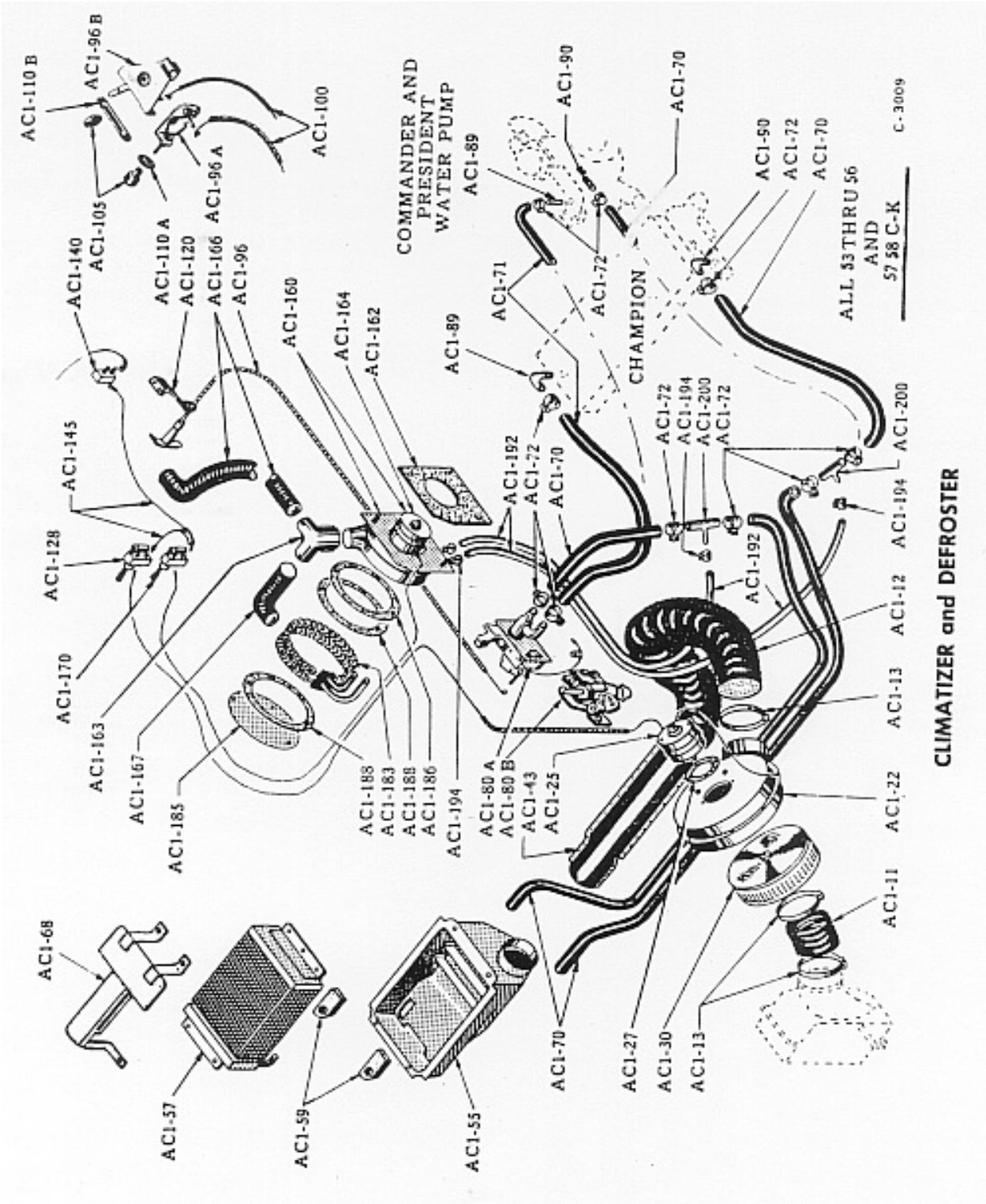
AC1-110 B
AC1-96 B
AC1-100
AC1-105
AC1-96 A
AC1-110 A
AC1-140
AC1-120
AC1-166
AC1-96
AC1-145
AC1-128
AC1-170
AC1-163
AC1-167
AC1-185
AC1-160
AC1-164
AC1-162
AC1-188
AC1-183
AC1-186
AC1-194
AC1-80 A
AC1-80 B
AC1-43
AC1-25
AC1-68
AC1-57
AC1-59
AC1-55
AC1-70
AC1-27
AC1-30
AC1-13
AC1-11
AC1-22
AC1-13
AC1-12
AC1-194
AC1-200
AC1-192
AC1-72
AC1-70
AC1-71
AC1-89
COMMANDER AND
PRESIDENT
WATER PUMP
AC1-90
AC1-72
CHAMPION
AC1-50
AC1-72
AC1-70
ALL 53 THRU 56
AND
57 58 C-K
C-3009
CLIMATIZER and DEFROSTER

ILLUST. NUMBER	PART NUMBER	PER CAR	DESCRIPTION

AC1 - CLIMATIZER AND DEFROSTER

	AC-2769	1	CLIMATIZER and DEFROSTER KIT w/HEATING UNITS - C-K U.S.A.

AC1 - A - CLIMATIZER

AC1-11	533308x5	1	HOSE, air duct to blower 5-1/2" long
AC1-12	533308x6	1	HOSE, blower to core housing tube 42" long
AC1-13	525547	3	CLAMP, hose to blower
	526600x6	2	CLIP, lacer
	g111633	6	SCREW, hose to tube No. 8 x 1/2"
AC1-22	1540088	1	BLOWER and BRACKET - C-K - U.S.A.
	- - - -	3	BOLT, to fender - 5/16" - 18 x 5/8" - C-K
	g120376	3	NUT, hex. 5/16" - 18
	- - - -	6	WASHER, lock 5/16" - C-K
AC1-25	1540090	1	MOTOR, blower - U.S.A.
AC1-27	1540092	1	GASKET, motor to blower
	g120614	2	NUT, hex. No. 10 - 32
	1540093	2	WASHER, mounting 7/32" - rubber
	g120391	2	WASHER, plain 7/32"
	g138479	2	WASHER, shakeproof No. 10
	192545	1	CONNECTOR, motor to switch cable
	- - - -	1	LOOM, motor cable - 24" long
	519864	2	CLIP, to body
AC1-30	532871	1	FAN, blower
	- - - -	1	SCREW, set No. 10 - 32 x 1/4"
AC1-43	533981	1	TUBE, blower hose to heater core housing
	g128270	2	SCREW, to core housing No. 8 x 3/8"
	- - - -	1	SCREW, to floor pan No. 10 x 1-1/2"
	- - - -	1	WASHER, plain No. 10
AC1-55	524853	1	HOUSING, climatizer core - U.S.A.
AC1-57	527350	1	CORE, climatizer - U.S.A.
	- - - -	6	BOLT and WASHER, to floor pan No. 14 - 14 x 5/8"
	1811x3	6	SPEED NUT, No. 14 - 14
AC1-59	519409	2	GROMMET, core to housing - rubber
AC1-68	537460	1	DEFLECTOR, heater core air

TYPE A

TYPE B

CLIMATIZER AND DEFROSTER HOSE CLAMP

AC1-70	526382x1	1	HOSE, water 5/8" I.D. x 187" (must be cut to lengths required)
AC1-71	526382x18	1	HOSE, engine to defroster tee 5/8" I.D. x 24"
AC1-72	g111606	10	CLAMP, hose 15/16"
	531087p	2	CLIP, hose - C-K Type A
	195407	4	CLIP, hose - C-K Type B
	- - - -	2	SCREW, clip No. 14 x 7/8"
	g178745	4	SCREW, clip 1/4" - 14 x 5/8"

ILLUST. NUMBER	PART NUMBER	PER CAR	DESCRIPTION
	g120392	1	WASHER, plain 9/32" - C-K
AC1-80A	532880	1	VALVE, thermostatic
	g148532	2	SCREW, to dash No. 10 x 1-1/2"
	- - - -	1	SCREW, tube clip to dash No. 10 x 3/8"
AC1-80B	NOT 56J		
AC1-89	440208	1	ELBOW, inlet hose to water manifold
AC1-90	531546	1	NIPPLE, outlet hose to water pump
AC1-96	NOT 56J		
AC1-96A	NOT 56J		
AC1-96B	1540140	1	CONTROL, thermostatic valve - C-K
	- - - -	2	SCREW, to inst. board No. 10 - 32 x 1/2" - C-K
AC1-100	1540142	1	TUBE and WIRE, control to valve - C-K 36-3/8" long
AC1-105	1540033	1	KNOB, valve control - C-K
AC1-110A	NOT 56J		
AC1-110B	1540032wp	1	BEZEL, valve control - C-K
	- - - -	2	SCREW, to inst. board No. 10 - 32 x 1/2" - C-K
AC1-120	NOT 56J		

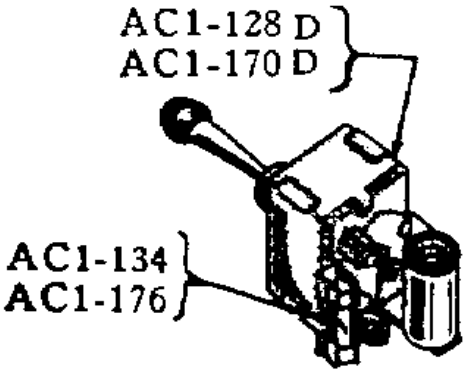

			CLIMATIZER CONTROL SWITCH
AC1-128D	1540283	1	SWITCH w/FUSE, climatizer - C-K
AC1-130	536350w	1	NUT, to inst board 9/16" - 28 C-K
AC1-134	g147685	1	FUSE, climatizer switch - 14 amp. - C-K
AC1-140	(Not 56J)		
AC1-145	1540292	1	CABLE, climatizer and defroster switches to gas gage - C-K
			AC1 - B - Windshield Defroster
AC1-160	1540098	1	BLOWER less HEATING UNIT or COIL, defroster - U.S.A.
AC1-162	532906	1	GASKET, mounting - paper
	g120376	3	NUT, to dash 5/16" - 18
	g138485	3	WASHER, lock 5/16"
	192545	1	CONNECTOR, motor to switch cable
AC1-163	532433p	1	OUTLET, defroster
	g128270	1	SCREW, to blower No. 8 x 2/8"
AC1-164	1540100	1	MOTOR, defroster blower - U.S.A.
	1540092	1	GASKET, motor to blower
	g271169	2	NUT and WASHER, hex. No. 10 - 32 - U.S.A.
AC1-166	525441x6	1	HOSE, blower - 19-1/2" long - except C-K
AC1-166	525441x11	1	HOSE, blower - 26" long - C-K (see 525441x4)

ILLUST. NUMBER	PART NUMBER	PER CAR	DESCRIPTION
AC1-167	525441x4	1	HOSE, blower - 15-1/2" long - C-K (Not available use 525441x6)
	526600x1	1	CLIP, lacer
AC1-170D	1540284	1	SWITCH w/FUSE, defroster - C-K
AC1-172	536350w	1	NUT, to inst. board 9/16" - 28 - C-K
AC1-176	g147685	1	FUSE, defroster switch - C-K
AC1-183	519419p	1	COIL, heater - U.S.A.
AC1-185	198650	1	COVER, outer, heater coil
AC1-186	198777	1	COVER, inner, heater coil
AC1-188	198649	2	GASKET, cover to coil - paper
	- - - -	3	SCREW, to blower No. 10 - 32 x 2-1/4"
	- - - -	3	WASHER, lock No. 10
AC1-192	526383x7	1	HOSE, WATER 3/8" I.D. x 53" long (sufficient for inlet and outlet hose must be cut to lengths required)
AC1-194	g111603	1	CLAMP, hose 11/16"
	530097	1	CLIP, to dash
AC1-200	536846	2	TEE, to climatizer

AC12 - RADIO AND ANTENNA (See Plate 21-37 Body Parts Manual)

AC12 - A - Radio and Components

	AC-2747	1	RADIO, "Stratoline" - automatic tuning - C-K
	AC-2748	1	RADIO, "Starline" - manual tuning - C-K
	1540528	1	RADIO SUPPRESSION KIT - consists of:
			2 - 1540361 Capacitor 1 - - - - Screw No. 10 x 3/8"
			1 - 1540354 Capacitor 1 - - - - Lock washer No. 10
			1 - 1540525 Ground strap 1 - - - - Lock washer 5/16"
			1 - 1540721 Ground strap 1 - - - - Screw No. 8 x 3/8"
			1 - 1540722 Clamp
AC12-5	1540347	1	BEZEL or OVERLAY, radio - for AC-2747
	1540346	1	BEZEL or OVERLAY, radio - FOR ac-2748
	1540353	2	NUT, mounting 7/16" - 28
AC12-22	1540350	2	KNOB, volume and tuning
	1540370	1	KNOB, tone control
	1540369	1	KNOB, dummy (on right side) manual
	1540370	1	KNOB, rear seat speaker switch - automatic
AC12-27	1540368	1	PIN, lock - for speaker switch knob 3/32" x 1/4"
	1540351	2	WASHER, knobs anti-rattle - felt
	1540715	1	CABLE, radio to ignition switch (with fuse holder)
	1540721	1	STRAP, ground - 4" - C-K
	g455640	1	FUSE, radio cable - 7-1/2 amp.
	1540360	1	CAPACITOR, radio suppression - coil - C-K
	1540361	1	CAPACITOR, radio suppression - regulator
	1540354	1	CAPACITOR, radio suppression - generator
	- - - -	1	GRILLE, radio - see group 2313C

AC12 - B - Rear Seat Speaker

	AC-2302	1	SPEAKER KIT, rear seat (Not available use AC-2777)
	AC-2777	1	SPEAKER KIT, rear seat (56G, 57B, 57H)
	533472	1	SPEAKER, rear seat (incl. in AC-2302)
	1540512	1	SPEAKER, rear seat (incl. in AC-2777, PA484650)
	532607p	1	SCREEN, speaker (incl. in AC-2302)
	1540514	1	SCREEN, speaker (incl. in AC-2777, PA484650)
	297925v	1	ORNAMENT, screen (letter "S") (incl. in AC-2302)
	532606	1	RIM or BEZEL, speaker (incl. in AC-2302)
	1540513	1	BEZEL, speaker (incl. in AC-2777, PA484650)
	g456326	6	BOLT, to speaker No. 8 - 32 x 1-1/8" (AC-2302)

ILLUST. NUMBER	PART NUMBER	PER CAR	DESCRIPTION
	1540557	4	BOLT, to speaker No. 8 - 32 x 1-1/2" (AC-2777)
	- - - -	6	NUT and WASHER, No. 8 - 32 (AC-2302)
	g120622	8	NUT, hex. No. 8 - 32 (AC-2777)
	- - - -	1	WASHER, lock - int. ext. No. 8 (AC-2777)
	- - - -	4	WASHER, lock - int. No. 8 (AC-2777)
	533473	1	CABLE, speaker to radio (incl. in AC-2302)
	1540515	1	CABLE, speaker to radio (incl. in AC-2777)
			AC12 - C Radio Antenna
	AC-2689	1	ANTENNA KIT, front, externally controlled
	AC-2775	1	ANTENNA KIT, rear dual, externally controlled - C-K
	AC-2688	1	ANTENNA KIT, front, internally controlled
	534019	1	KNOB ASSEMBLY, control (incl. in AC-2688)
	534013	1	INSULATOR, upper - bakelite (incl. in AC-2688)
	534018	1	INSULATOR, lower - bakelite (incl. in AC-2688)
	534016	1	INSULATOR, center - bakelite (incl. in AC-2688)
	534014	1	GASKET, to cowl - rubber (incl. in AC-2688)
	534017	1	GASKET, to lower insulator - rubber (incl. in AC-2688)
	534015	1	NUT, to center insulator (incl. in AC-2688)
	534011	1	NUT, upper insulator finishing (incl. in AC-2688)
	534012w	1	WASHER, upper insulator finishing (incl. in AC-2688)
	537338	1	INSULATOR, lower bakelite (incl. in AC-2688)
	537337	1	GASKET, to lower insulator - rubber (incl. in AC-2688)

ILLUST. NUMBER	PART NUMBER	PER CAR	DESCRIPTION

AC13 - INSTRUMENT BOARD ACCESSORIES

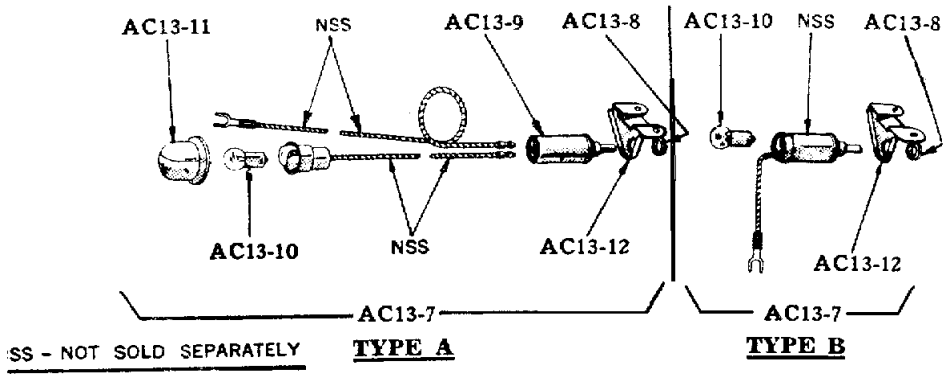

GLOVE COMPARTMENT LIGHT

AC13 - A - Compartment Light

AC13-7	AC-2752	1	LIGHT, compartment - C-K
AC13-9	304808	1	SWITCH, compartment light (Incl. in AC-2752)
AC13-8	291145w	1	NUT, retaining 3/8" - 32 (Incl. in AC-2752)
	g138544	1	WASHER, shakeproof 3/8" (Incl. in AC-2752)
AC13-10	g127934	1	BULB, compartment light (Mazda No. 57) (Incl. in AC-2752)
AC13-11	298825	1	LENS, compartment light (Incl. in AC-2752)
AC13-12	NOT 56J		
	1314489	1	RETAINER, compartment light (Incl. in AC-2752)
	- - - -	2	SCREW, to box No. 8 - 32 x 1/2"
	- - - -	2	NUT and WASHER, No. 8 - 32
	1314822	1	CABLE, compartment light ground (Incl. in AC-2752)

AC13 - B - Kleenex Dispenser

	AC-2366	1	KLEENEX DISPENSER
	1540676	1	BRACKET, kleenex dispenser - C-K (not incl. in AC-2366)

AC14 - CIGAR LIGHTER

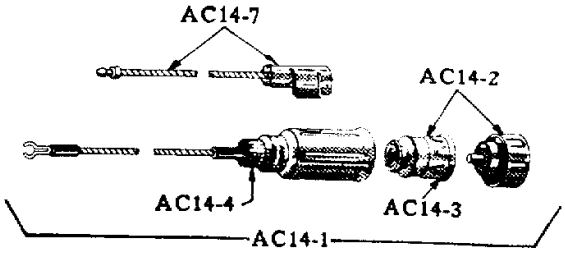

AC14-1	AC-2750	1	CIGAR LIGHTER COMPLETE consists of button element socket, fuse cable and light
AC14-2	1540025	1	BUTTON and ELEMENT, cigar lighter (incl. in AC-2750) chrome
AC14-3	1540026	1	ELEMENT, cigar lighter (incl. in AC-2750)
AC14-4	278416	1	FUSE, cigar lighter (incl. in AC-2750)
AC14-7	1540024	1	LIGHT, cigar lighter (incl. in AC-2750)
	1541674	1	BULB, cigar lighter (Mazda No. 1445) (incl. in 1540024)

ILLUST. NUMBER	PART NUMBER	PER CAR	DESCRIPTION

AC16 - DOOR EDGE GUARD

AC-2810	1	GUARD, chrome door edge - set of 2 - C-K

AC27 - SEAT SAFETY BELT

Each kit consists of 4 belts, cable and all fastening parts.

SP-50060	1	FRONT SEAT BELT KIT	Gray
SP-50061	1	FRONT SEAT BELT KIT	Green
SP-50062	1	FRONT SEAT BELT KIT	Red
SP-50063	1	FRONT SEAT BELT KIT	Blue
SP-50064	1	FRONT SEAT BELT KIT	Brown
SP-50065	1	FRONT SEAT BELT KIT	Black
SP-50070	1	REAR SEAT BELT KIT	Gray
SP-50071	1	REAR SEAT BELT KIT	Green
SP-50072	1	REAR SEAT BELT KIT	Red
SP-50073	1	REAR SEAT BELT KIT	Blue
SP-50074	1	REAR SEAT BELT KIT	Brown
SP-50075	1	REAR SEAT BELT KIT	Black

AC30 - TRUNK LIGHT AND DECK LID NAME PLATE

AC-2767		TRUNK and UTILITY LIGHT EQUIPMENT (consists of lamp complete with cord and reel, bracket, grommet, cables, clips and connectors)
1312907	1	TRUNK LIGHT
g455490	1	BULB, trunk light (Mazda No. 1003) incl. in AC-2767

AC41 - AUXILIARY FLOOR MATS

AC-2368	1	MAT, right, front floor carpet - C-K - LHC
AC-2367	1	MAT, left, front floor carpet - C-K - LHC
AC-2813	1	MAT, car-pet front floor - black (pair)
AC-2814	1	MAT, car-pet front floor - brown (pair)
AC-2815	1	MAT, car-pet front floor - green (pair)
AC-2816	1	MAT, cap-prt front floor - red (pair)

AC45 - REAR VIEW MIRRORS

AC45—REAR VIEW MIRRORS

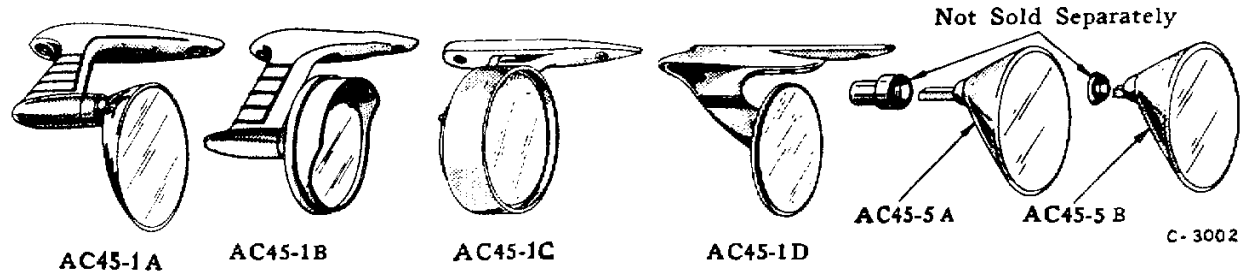

All mirrors, Complete with fastening parts

AC45-1A	AC-2728	2	MIRROR, super-vue outside (for right or left side)
AC45-1B	AC-2836	2	MIRROR, starline outside (for right or left side)
AC45-1C	AC-2861	2	MIRROR, regal outside (for right or left side)
AC45-1D	NOT 56J		
AC45-5A	AC-2729	2	MIRROR ONLY - for AC-2728

ILLUST. NUMBER	PART NUMBER	PER CAR	DESCRIPTION
AC45-5B	AC-2812	2	MIRROR ONLY - for AC-2728
	AC-2864	2	MIRROR ONLY - for AC-2836
	AC-2893	2	MIRROR ONLY - for AC-2861
	AC-1855	1	MIRROR, visor vanity
	1546756	1	EMBLEM, outside mirror - for AC-2861 (crest)

AC47 - WINDSHIELD VISOR

	AC-2385	1	VISOR, windshield - K
	g161791	13	SCREW, to body No. 6 x 3/8"
	535561	1	MOULDING, visor - C-K (incl. in AC-2385)
	534566	9	FASTENER, to visor
	534567	9	BUTTON, fastener

AC49 - WINDSHIELD WASHER

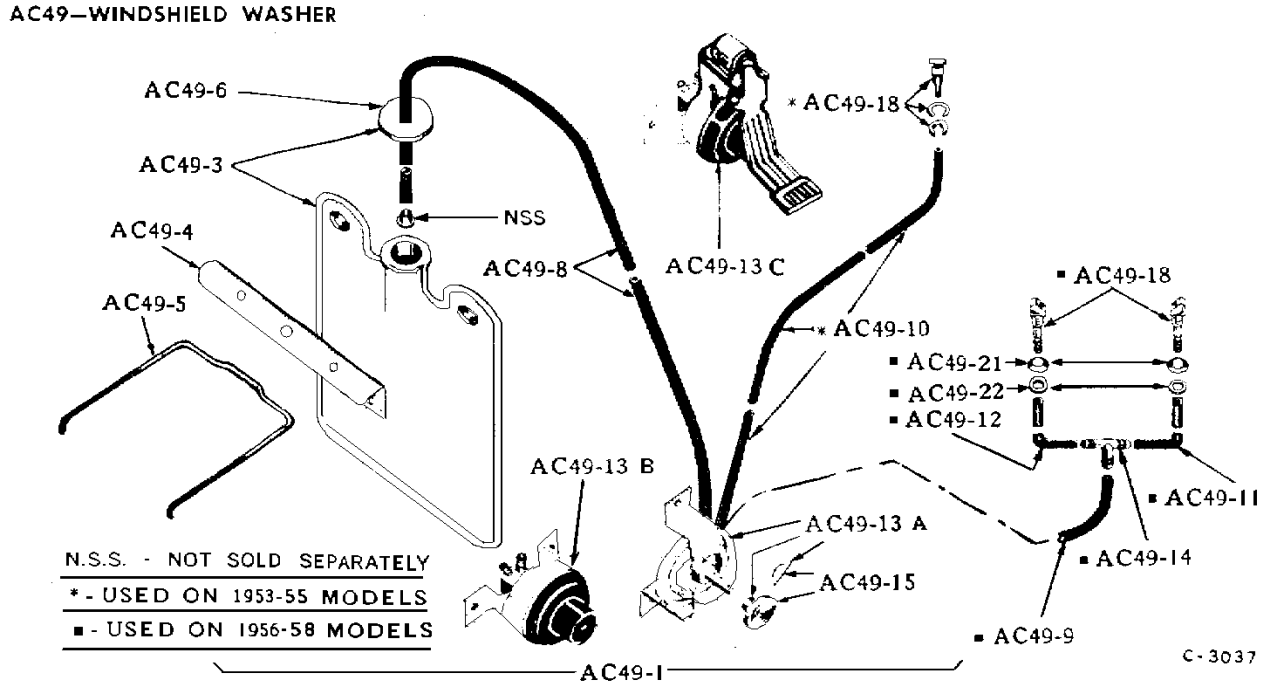

AC49-1	AC-2774	1	WASHER KIT, windshield - LHC
AC49-3	533756	1	BAG with CAP, washer (incl. in all Washer Kits)
AC49-4	1540398	1	BRACKET, washer bag support - C-K
AC49-5	NOT 56J		
AC49-6	533761	1	CAP, bag
AC49-8	1540400	1	HOSE, bag to pump 11/32" O.D. x 37" long -LHC
AC49-9	1540409	1	HOSE, pump to tee 9/32" O.D. x 28" long
AC49-10	NOT 56J		
AC49-11	1540421	1	HOSE, tee to right nozzle 3/16" O.D. x 40" long
AC49-12	1540420	1	HOSE, tee to left nozzle 3/16" O.D. x 9" long
	526600x4	1	CLIP, to chassis cables
AC49-14	1540414	1	TEE, hose (incl. in AC-2774)
AC49-13A	NOT 56J		
AC49-13B	535552	1	PUMP, washer - bellows type (incl in kits)

ILLUST. NUMBER	PART NUMBER	PER CAR	DESCRIPTION
AC49-13C	NOT 56J		
	- - - -	2	SCREW, to floor pan No. 10 x 1" (incl. in kits)
AC49-18	1540417	2	NOZZLE, washer (incl. in AC-2774)
AC49-21	1540418	2	WASHER, nozzle (incl. in AC-2774)
AC49-22	1540419	2	GASKET, nozzle (incl. in AC-2774)
	SP-50008	*	SOLVENT, windshield washer (winter or summer, 6 oz.)

* - Use as required

From page 3 - Chassis Parts Manual

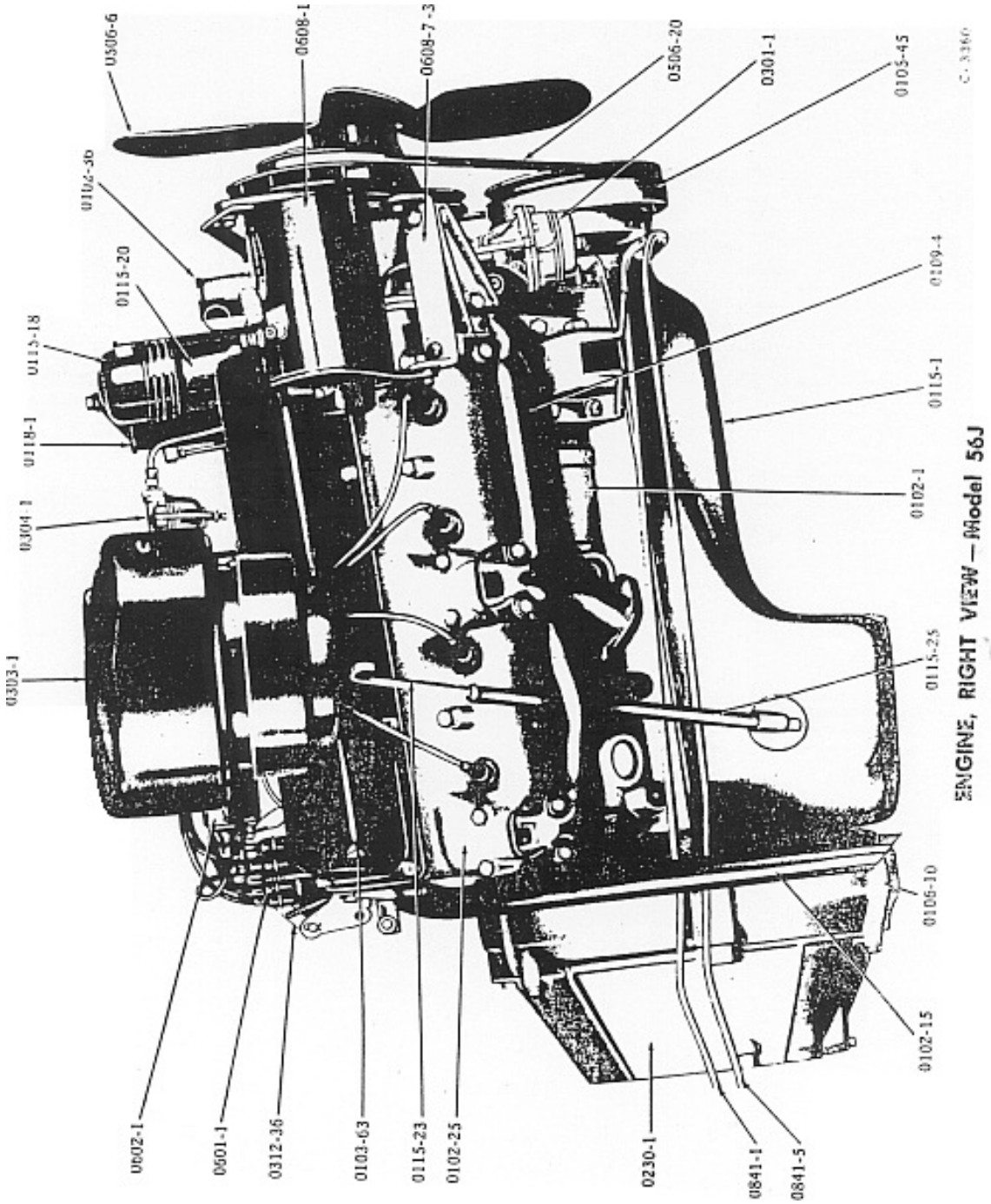

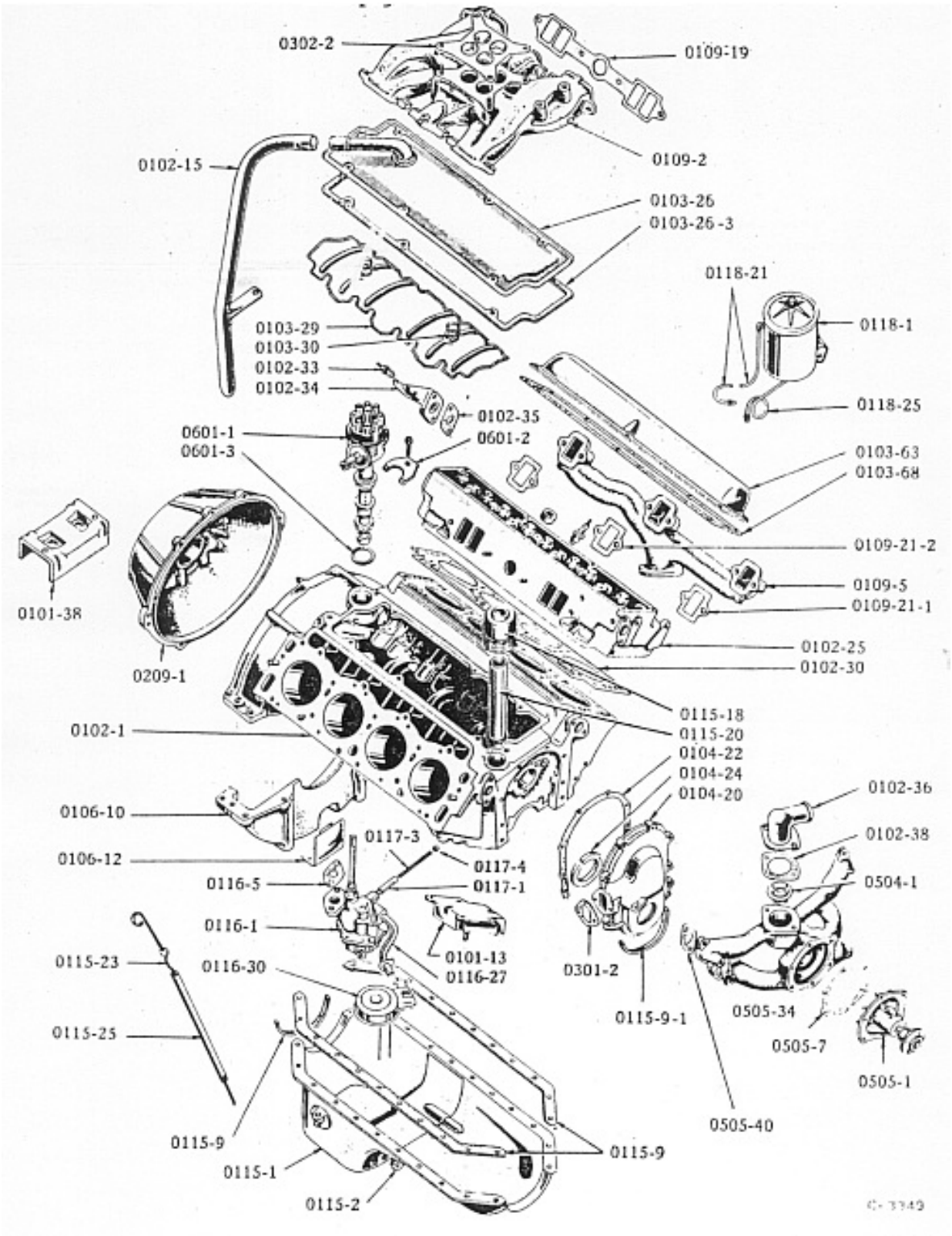
0302-2
0109-19
0109-2
0102-15
0103-26
0103-26-3
0118-21
0118-1
0118-25
0103-29
0103-30
0102-33
0102-34
0102-35
0601-1
0601-3
0601-2
0103-63
0103-68
0109-21-2
0109-5
0109-21-1
0101-38
0209-1
0102-25
0102-30
0115-18
0115-20
0102-1
0104-22
0104-24
0104-20
0102-36
0106-10
0102-38
0117-3
0106-12
0117-4
0504-1
0116-5
0117-1
0116-1
0101-13
0115-23
0116-30
0116-27
0301-2
0505-34
0115-9-1
0115-25
0505-7
0505-1
0505-40
0115-9
0115-9
0115-1
0115-2

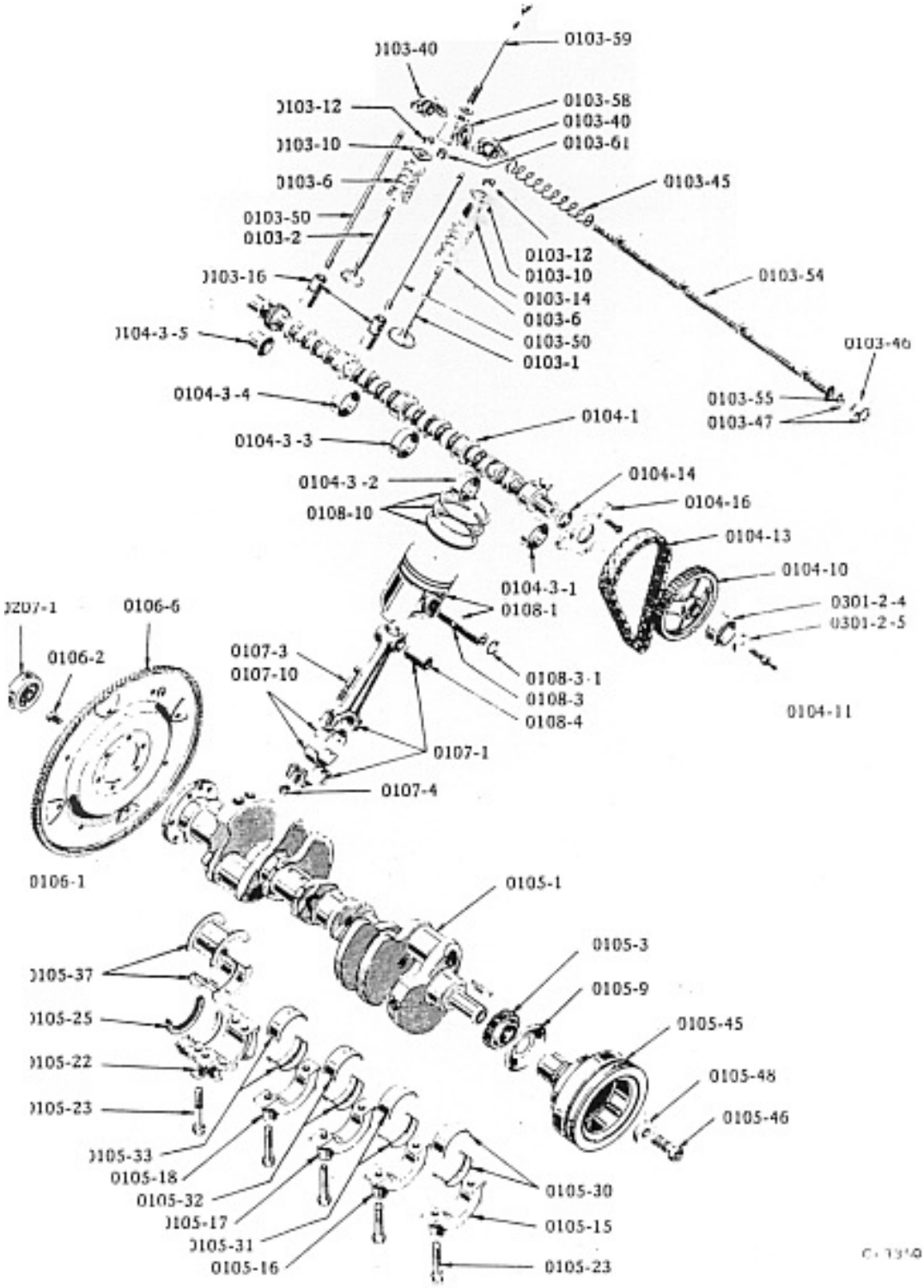

ENGINE, INTERNAL PARTS—Model 56J

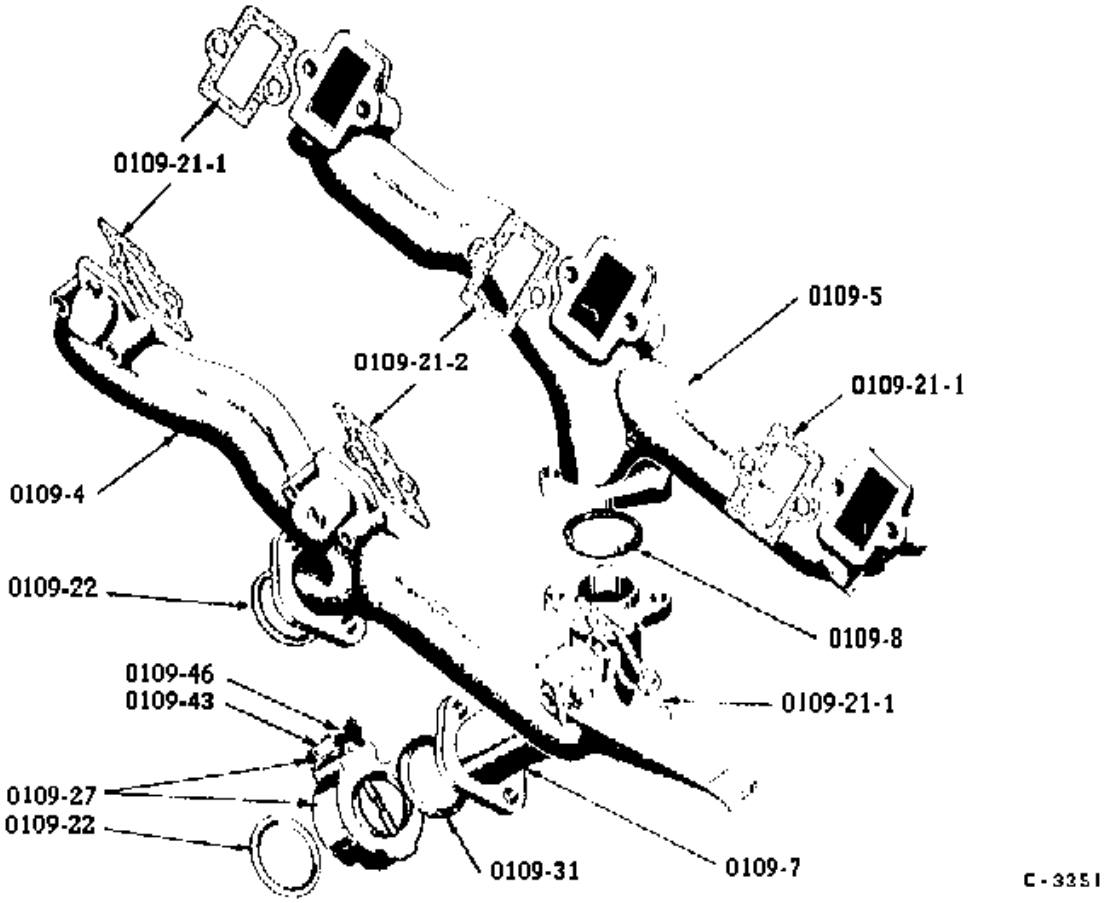
0109-21-1
0109-5
0109-21-2
0109-21-1
0109-4
0109-22
0109-8
0109-46
0109-43
0109-21-1
0109-27
0109-22
0109-31
0109-7
C-3351

OIL PUMPS - Model 56J

From page 12 - Chassis Parts Manual

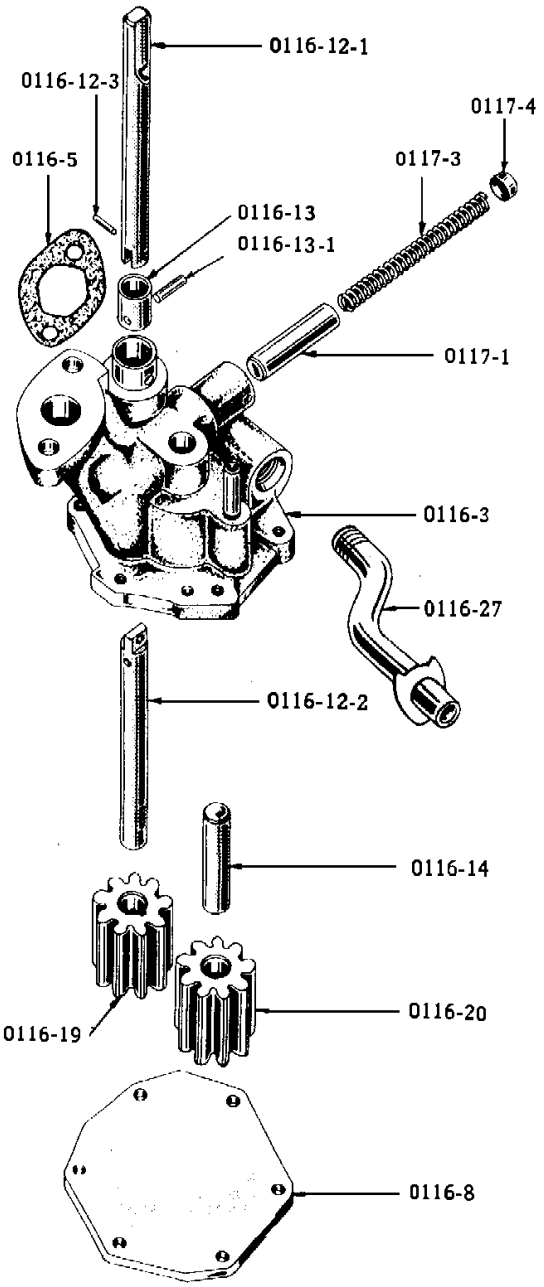

MODEL 56J

C-3359

ILLUST. NUMBER	PART NUMBER	PER CAR	DESCRIPTION

0100 - ENGINE ASSEMBLY

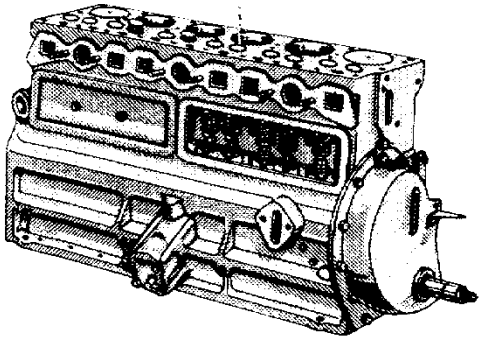

STRIPPED ENGINE

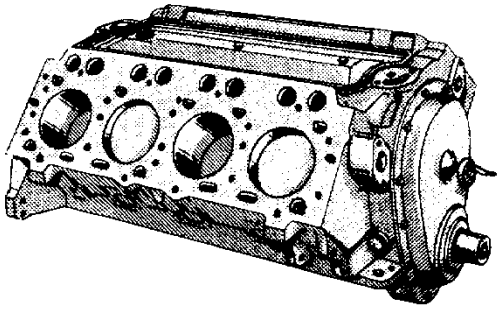

SHORT BLOCK

C-3633

STRIPPED ENGINE:
Consists of cylinder block, pistons, rings, connecting rods, crankshaft, camshaft, all bearings, timing gears and cover, oil pressure valve, oil pan filler block, engine valves, valve springs, valve covers, oil pump, front support plate and flywheel or convertor bolts.

SHORT BLOCK:
Consists of cylinder block, pistons, rings, connecting rods, crankshaft, camshaft, all bearings, timing gears and cover, oil pressure valve, oil pan filler block, valve lifter cover, fuel pump eccentric and flywheel or convertor bolts.

NOTE:
Model 56J engines identified by the letters XH stamped on the serial number pad are equipped with special pistons, cylinder head gasket shims and inlet minifold gasket shims to provide low compression ratio for Export and Canada.

	6484116	1	SHORT BLOCK, engine - std.
	- - - -	1	SHORT BLOCK, engine - used with low comp. head (Not available)
	458669	1	GASKET SET, engine overhaul complete

0101 - ENGINE MOUNTINGS (Plates 01-4, 9)

Front Mountings

0101-9	1539068	1	BRACKET, right, front support (mounted on frame) (illust. plate 15-2)
	1539069	1	BRACKET, left, front support (mounted on frame) (illust. plate 15-2)
	- - - -	12	RIVET, to frame 5/16" x 7/8" - K
0101-13	1539064	2	INSULATOR, front support
	g271506	2	NUT, to mtg. bracket 7/16" - 20
	- - - -	2	WASHER, plain 1/2"
	g120383	2	WASHER, lock 7/16"
	g179837	8	SCREW, to cyl. block 3/8" - 16 x 3/4"
	g120382	8	WASHER, lock 3/8"

Rear Mountings

0101-38	6489495	1	INSULATOR, rear support
	g442828	2	NUT, to cross member 3/8" - 24
	g106340	2	SCREW, to trans. case 1/2" - 13 x 7/8"
	- - - -	2	WASHER, lock 1/2"

ILLUST. NUMBER	PART NUMBER	PER CAR	DESCRIPTION
0102 - CYLINDER BLOCK, HEAD AND GASKET (Plates 01-4, 9)			
			Cylinder Block
	6484556	1	CYLINDER BLOCK ASSY. - Std.
			(Fitted with pistons, pins and rings)
	- - - -	1	CYLINDER BLOCK ASSY. - (for low comp. head) Not Available
0102-1	- - - -	1	CYLINDER BLOCK (use 6484556)
	427204	6	PLUG, water jacket
	g127950	2	PLUG, water jacket drain 1/8"
	- - - -	1	PLUG, oil passage - 1/4" sq. head
	g106517	1	PLUG, oil gallery left rear outer 1-1/8"
	g126045	2	PLUG, oil gallery rear 3/8"
	g103877	1	PLUG, vacuum hole 1/8"
	g103897	1	Plug, camshaft rear bearing hole 1-3/4"
0102-15	1539732	1	TUBE, breather
0103-26-2	6240743	1	CLAMP, to valve lifter cover tube
			Cylinder Head
0102-25	6480407	2	HEAD, cylinder
	g103876	2	PLUG, core hole 1"
	g444687	1	PLUG, oil line 1/8"
	427142	4	DOWEL, pin 1/2" x 13/16"
	440137	12	SCREW, to cyl. block 7/16" - 14 x 3 5/8"
	440139	10	SCREW, to cyl. block 7/16" - 14 x 5 7/16"
0103-59	440140	8	SCREW, thru cyl. head 7/16" - 14 x 7 1/4"
	440869	30	WASHER, plain 7/16"
0102-30	440469	2	GASKET, cylinder head (incl. in 458670 set)
	6480755	2	SHIM, cyl. head gasket (used with low compression
			cylinder head - export and Canada)
	458670	1	GASKET SET, valve grinding -
			Consists of the following gaskets:
			2 - 440469 Cylinder head
			2 - 6480211 Inlet manifold
			1 - 458668 Rocker arm cover set
			1 - 440363 Valve lifter cover
			4 - 446742 Exh. manifold - end
			4 - 440333 Water manifold
			2 - 446743 Exh. manifold - center
	440336	1	COVER, right cyl. head rear end - w/OD.
0102-31	6480544	1	COVER, right cyl. head rear end - w/AD
			(illust. plate 03-12)
	g100123	2	SCREW, to head 3/8" - 16 x 3/4"
	g120382	2	WASHER, lock 3/8"
	g445686	1	PLUG, pipe 3/8"
	440333	1	GASKET, right cyl. head rear end cover
	- - - -	1	RADIMETER or HEAT INDICATOR (dash unit) see group 1714
0102-33	1539876	1	GAGE, water temperature
	g120614	1	NUT, terminal No. 10-32 for 1539876
	g138479	1	WASHER, lock No. 10, for 1539876
0102-34	6480543	1	ADAPTER, water temperature gage - w/OD
0102-34	6480546	1	ADAPTER, water temperature gage - w/AD
	g100133	1	SCREW, to cyl. head 3/8" - 16 x 3/4"
	471076	1	STUD, to cyl. head 3/8" - 24 x 1 3/4"
	g120382	2	WASHER, lock 3/8"
0102-35	440333	1	GASKET, water temperature gage adapter
0102-36	1539099	1	OUTLET, engine water
0102-37	g179839	2	SCREW, to water manifold 3/8" - 16 x 1"
	g120382	2	WASHER, lock 3/8"

ILLUST. NUMBER	PART NUMBER	PER CAR	DESCRIPTION
0102-38	440474	1	GASKET, engine water outlet
			THERMOSTAT - See Group 0504
			SPARK PLUGS - See Group 0603

0103 - VALVES AND VALVE MECHANISM (Plates 01-4, 9, 19)

Valves, Springs, Guides, Tappets and covers

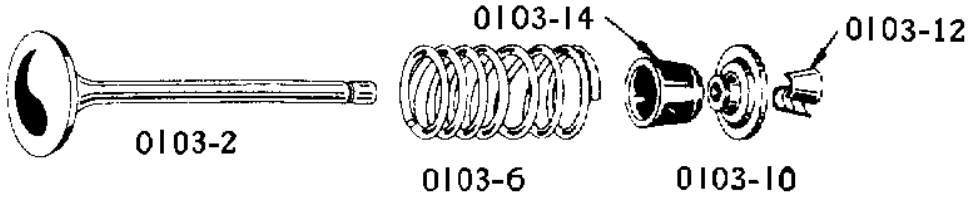

MODEL 56J

0103-1	6480390	8	VALVE, inlet - std.
0103-1	6480391	8	VALVE, inlet - .003 OS.
0103-1	6480392	*	VALVE, inlet - .010 OS.
0103-1	6480393	*	VALVE, inlet - .020 OS.
0103-1	6480394	*	VALVE, inlet - .030 OS.
0103-2	440664	*	VALVE, exhaust - std.
0103-2	440668	*	VALVE, exhaust - .003 OS.
0103-2	440669	*	VALVE, exhaust - .010 OS.
0103-2	440670	*	VALVE, exhaust - .020 OS.
0103-2	440671	*	VALVE, exhaust - .030 OS.
0103-6	6480807	16	SPRING, valve
0103-10	6492077	16	RETAINER, valve spring
0103-12	440319	32	SEAT, valve spring
0103-14	476056	8	DEFLECTOR, inlet valve stem oil
0103-16	476060	16	TAPPET or LIFTER (Hydraulic)
0103-26	6489200	1	COVER, valve lifter
0103-26-2	6240743	1	CLAMP, to valve lifter cover tube (see 0102-15)
0103-26-2	g442695	6	SCREW and WASHER to cyl. block 5/16" - 18 x 5/8"
0103-26-3	440363	1	GASKET, valve lifter cover (incl. in 458670 set)
0103-27	6484396	1	BAFFLE KIT, valve chamber oil (service only 1st 2500 cars)
	6489127	4	BAFFLE, valve chamber oil (after approx. 2500 cars) (Also order 2 pcs. of 6489048 washer with each baffle)
0103-29	440649	1	BAFFLE, valve lifter cover
0103-30	373702	2	SPRING, valve lifter cover baffle

Rocker Arms, Shafts and Push Rods

0103-40-1	6440471	8	ARM, right, valve rocker
0103-40-2	6440470	8	ARM, left, valve rocker
0103-45	427343	6	SPRING, valve rocker arm
0103-46	440089	4	WASHER, spring
0103-47	427056	8	WASHER, spacer
	- - - -	4	COTTER, 3/32" x 1 1/4"
0103-50	6480610	16	PUSH ROD, valve rocker arm
0103-54	440466	2	SHAFT w/PLUGS, valve rocker arm
0103-55	- - - -	4	PLUG, cup 5/8"
0103-58	440645	8	BRACKET, valve rocker arm shaft
0103-59	440140	8	SCREW, thru cyl. head 7/16" - 14 x 7 1/4"
0103-61	455556	4	DOWEL. tubular .5670 x 1/2"

ILLUST. NUMBER	PART NUMBER	PER CAR	DESCRIPTION
0103-63	471064	2	COVER, valve rocker arm
	AC-2796	1	COVER KIT, valve rocker arm chrome (consists of 2 covers and gaskets)
	g9409101	14	SCREW and WASHER, 5/16" - 18 x 5/8"
0103-68	458668	1	GASKET SET, valve rocker arm cover (2 gaskets) (incl. in 458670 set)

0104 - CAMSHAFT AND BEARINGS, GEAR AND COVER (Plates 01-9, 10)

Camshaft and Bearings

0104-1	6480561	1	CAMSHAFT
0104-3-1	440380	1	BEARING, camshaft, front
0104-3-2	440381	1	BEARING, camshaft, No. 2
0104-3-3	440382	1	BEARING, camshaft, No. 3
0104-3-4	440383	1	BEARING, camshaft, No. 4
0104-3-5	440384	1	BEARING, camshaft, rear

Timing Gear and Cover

0104-10	440843	1	SPROCKET, camshaft timing chain
	g103907	1	KEY, woodruff No. 11
0104-11	440372	1	SCREW, to camshaft 3/8" - 16 x 1"
0104-13	440842	1	CHAIN, timing
0104-14	6480917	1	SPACER, camshaft timing sprocket
0104-16	6480918	1	THRUST PLATE, timing sprocket
	440366	3	SCREW, to cyl. block 5/16" - 18 x 3/4"
0104-20	440710	1	COVER, timing sprocket
	g106326	8	SCREW, to cyl. block 5/16" - 18 x 1 1/8"
	g120393	8	WASHER, plain 11/32"
	g120214	8	WASHER, lock 5/16"
0104-22	440061	1	GASKET, timing sprocket cover
0104-24	6489724	1	WASHER, timing sprocket cover oil (incls. retainer)

0105 - CRANKSHAFT, BEARINGS, CAPS, GEAR AND DAMPER (Plate 01-10)

Crankshaft

0105-1	476009	1	CRANKSHAFT
0105-3	440841	1	SPROCKET, crankshaft timing chain
	440686	1	KEY, feather 3/16" x 1/4" x 1 15/16"
0105-9	440703	1	SLINGER, crankshaft oil
	- - - -	1	BEARING, clutch pilot - see Group 0207

Bearing Caps and Bearings

0105-15	476037	1	CAP, front, crankshaft bearing (No. 1)
0105-16,17,18	476038	3	CAP, intermediate, crankshaft bearing (No. 2, 3, & 4)
0105-22	476039	1	CAP, rear, crankshaft bearing (No. 5)
0105-23	440065	10	SCREW, to cyl. block 1/2" - 13 x 3 3/8"
0105-25	427104	2	OIL SEAL, rear bearing cap - asbestos

ILLUST. NUMBER	PART NUMBER	PER CAR	DESCRIPTION
0105-30,31,32,33,37			
	458400	1	BEARING SET, crankshaft - std. - consists of:
			4 - 458412 Brg. No. 1,2,3,4
			1 - 458416 - Bearing, rear
	458401	1	BEARING SET, crankshaft - .001 undersize-consists of:
			4 - 458413 Brg. No. 1,2,3,4
			1 - 458417 - Bearing, rear
	458402	1	BEARING SET, crankshaft - .002 undersize-consists of:
			4 - 458414 Brg. No. 1,2,3,4
			1 - 458418 - Bearing, rear
	458403	1	BEARING SET, crankshaft - .020 undersize-consists of:
			4 - 458415 Brg. No. 1,2,3,4
			1 - 458419 Bearing, rear

Crankshaft bearings should always be ordered in sets. The separate bearings which comprise these sets may still be obtained at the factory but should be ordered only when a bearing in a set has been damaged during installation. See above listings of bearing sets and component parts.

Vibration Damper

0105-45	440715	1	FLYWHEEL, vibration damper (incls. fan pulley)
0105-46	440598	1	SCREW, to c/shaft 1-3/8"
0105-48	6300063	1	WASHER, plain 3/4"
0105-57	- - - -	1	PULLEY, fan drive (part of damper flywheel)

Power Steering Drive Pulley

0105-70	455815	1	PULLEY, drive
0105-73	NOT 56J		

0106 - FLYWHEEL AND STARTER GEAR (Plate 01-10)

0106-1	440529	1	FLYWHEEL w/GEAR - w/OD.
0106-1	440531	1	FLYWHEEL w/GEAR - w/AD.
0106-2	443171	6	SCREW, to crankshaft 7/16" - 20 x 9/16"
0106-6	440532	1	GEAR, starter ring - w/OD.
	- - - -	1	HOUSING, upper flywheel (integral with cyl. block)
0106-10	6480519	1	HOUSING, lower flywheel
	g427934	2	SCREW, to cyl. block 3/8" - 16 x 1 1/4"
	g427940	4	SCREW, to cyl. block 3/8" - 16 x 1 1/2"
	g120382	6	WASHER, lock 3/8"
	g141246	2	DOWEL, pin 3/8" x 1 1/4"
0106-12	440975	1	COVER, lower housing inspection hole
	- - - -	2	SCREW, to housing 1/4" - 20 x 1/2"
	- - - -		HOUSING, clutch and flywheel - see group 0209

0107 - CONNECTING RODS AND BEARINGS (Plate 01-10)

0107-1	440775	8	CONNECTING ROD w/BUSHING, less bearing
0107-3	440776	16	BOLT, rod cap 3/8" - 24 x 2 1/4"
0107-4	427042	16	NUT, self locking 3/8" - 24
0107-10	458406	8	BEARING UNIT, conn. rod - std.
0107-10	458407	8	BEARING UNIT, conn. rod - .001 US.
0107-10	458408	8	BEARING UNIT, conn. rod - .002 US.
0107-10	458409	8	BEARING UNIT, conn. rod - .020 US.

ILLUST. NUMBER	PART NUMBER	PER CAR	DESCRIPTION

0108 - PISTONS, PINS AND RINGS (Plate 01-10)

Pistons and Pins

0108-1	6484020	8	PISTON w/PIN - std.
0108-1	6484021	8	PISTON w/PIN - .010 OS.
0108-1	6484022	8	PISTON w/PIN - .020 OS.
0108-1	6484023	8	PISTON w/PIN - .030 OS.
	The following pistons used with low compression cylinder head - export and Canada		
0108-1	6484677	8	PISTON w/PIN - std.
0108-1	6484678	8	PISTON w/PIN - .010 OS.
0108-1	6484679	8	PISTON w/PIN - .020 OS.
0108-1	6484680	8	PISTON w/PIN - .030 OS.
0108-3	440405	8	PISTON PIN - Std.
0108-3	458513	8	PISTON PIN - .003 OS.
0108-3	458514	8	PISTON PIN - .006 OS.
0108-3-1	440995	16	LOCK RING

Piston Rings

0108-10	474170	1	PISTON RING SET, standard - consists of: 8 - 440028 Comp. ring, top 8 - Oil ring assy. 8 - 440024 Comp. ring, 2nd
0108-10	474171	1	PISTON RING SET, .020 OS. - consists of: 8 - 440029 Comp. ring, top 8 - Oil ring assy. 8 - 440025 Comp, ring, 2nd
0108-10	474172	1	PISTON RING SET, .030 OS. - consists of: 8 - 458381 Comp. ring, top 8 - Oil ring assy. 8 - 458383 Comp. ring, 2nd
	SP-50098	1	PISTON RING SET, - std. (Kromex type)

(Piston rings should always be ordered in sets. The separate rings which comprise these sets may still be obtained at the factory but should be ordered only when a ring in a set has been damaged or broken during installation. See above listing of ring sets and component parts.)

0109 - INLET AND EXHAUST MANIFOLDS AND HEAT CONTROL (Plate 01-12)

Manifolds

0109-2	440893	1	MANIFOLD, inlet
	g180124	4	SCREW, to cyl. head 3/8" - 16 x 1-1/4"
	360433	4	WASHER, plain 3/8"
	6480056	4	STUD, to cyl. head 3/8" - 16-24 x 2"
	433310	4	NUT, hex. 3/8" - 24
	427130	4	WASHER, plain 13/32" I.D.
0109-4	446741	1	MANIFOLD, right, exhaust
0109-5	446740	1	MANIFOLD, left, exhaust
	440905	12	SCREW, to cyl. head 3/8" - 16 x 1 3/4"
	476024	2	LOCK PLATE, center
	476025	3	LOCK PLATE, end (except generator end)
	476026	1	LOCK PLATE, end (generator end)
0109-7	1539404	1	EXTENSION, left, exhaust manifold
	g122138	2	SCREW, to manifold 3/8" - 16 x 1 1/8"
0109-8	440575	1	GASKET, left exhaust manifold extension
	458673	1	GASKET SET, inlet manifold -

ILLUST. NUMBER	PART NUMBER	PER CAR	DESCRIPTION
			consists of the following gaskets:
			2 - 6480211 Inlet manifold
			1 - 440613 Carburetor
	458672	1	GASKET SET, exhaust manifold -
			consists of following gaskets:
			4 - 446742 Exh. manifold - end
			2 - 440866 Exh. pipe
			2 - 446743 Exh. manifold - center
			1 - 440575 Heater valve
0109-19	6480211	2	GASKET, inlet manifold (incl. in set 458673)
0109-21-1	446742	4	GASKET, end, exh. manifold (incl. in set 458672)
0109-21-2	446743	2	GASKET, center, exh. manifold (incl. in set 458672)
	440885	2	SHIM, inlet manifold gasket (used with low compression cylinder head - export and Canada)
0109-22	440866	2	GASKET, exhaust pipe flange (see 0401-2)
			Manifold Heater
0109-27	440853	1	VALVE ASSY., COMPLETE, heater
0109-31	440575	1	GASKET, heater valve housing (incl. in set 458672)
0109-43	440750	1	BALANCE, heater valve
0109-44	440778	1	PIN, groove 3/32" x 1/2"
0109-46	440753	1	THERMOSTAT, heater valve

0115 - OIL PAN, GASKETS, FILLER AND LEVEL GAGE (Plate 01-09)

			Oil Pan and Gaskets
0115-1	6480602	1	OIL PAN w/PLUG
0115-2	426205	1	PLUG, drain 5/8" - 18
	6480955	1	GASKET, plug
	g217232	16	SCREW and WASHER, to block 5/16" - 18 x 9/16"
	g443609	4	SCREW and WASHER, to block 5/16" - 18 x 7/8"
	471074	2	STUD, to block 5/16" - 24 x 1-7/16"
	g120393	*	WASHER, plain 11/32"
	g120214	*	WASHER, lock 5/16"
0115-9	NOT 56J		
0115-9-1	476004	1	GASKET, front, oil pan (incl. in 458671 set)
0115-9.9-1	458671	1	GASKET SET, oil pan Consists of: 1 ea. right, left, front and rear gaskets or seals)
0115-18	194461	1	CAP, oil pan filler
0115-20	476062	1	TUBE, oil pan filler

ILLUST. NUMBER	PART NUMBER	PER CAR	DESCRIPTION

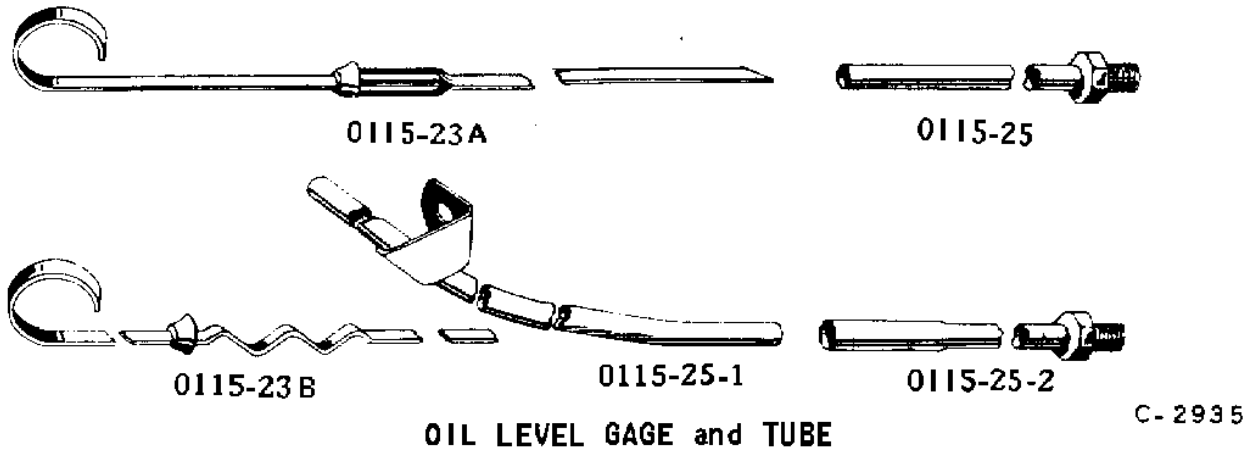

OIL LEVEL GAGE and TUBE

Oil Level Gage and Tube

0115-23	440725	1	GAGE, oil level
0115-25	440801	1	TUBE, level gage

0116 - OIL PUMP, STRAINER AND PRESSURE GAGE PIPES (Plates 01-9, 13)

Oil Pump

0116-1	6480508	1	OIL PUMP COMPLETE (incls. oil strainer)
	g100134	2	SCREW, to bearing cap 3/8" - 16 x 1"
	g120382	2	WASHER, lock 3/8"
	440073	1	PIN, dowel, to bearing cap 27/32" x 1-3/16"
0116-3	440679	1	BODY, oil pump (incls. idler shaft)
0116-5	440988	1	GASKET, oil pump body
0116-8	6480507	1	COVER, oil pump body
	g100109	6	SCREW, to body 1/4" - 20 x 3/4"
	- - - -	6	WASHER, lock 1/4"
0116-12-1	440354	1	SHAFT, upper, pump drive
0116-12-2	440600	1	SHAFT, lower, pump drive
0116-12-3	440143	1	PIN, upper to lower shaft 1/8" x 15/32"
0116-13	440353	1	SLEEVE, oil pump drive shaft
0116-13-1	g110741	1	PIN, to shaft 1/8" x 11/16"
0116-14	440601	1	SHAFT, oil pump idler gear
0601-44	- - - -	1	GEAR, oil pump and distributor (see Group 0601)
0116-19	440642	1	GEAR, oil pump driven
	g103905	1	KEY, woodruff 1/8" x 11/16"
0116-20	440681	1	GEAR, oil pump idler
0116-27	440728	1	PIPE, oil pump suction

Oil Strainer

0116-30	440722	1	STRAINER, oil

ILLUST. NUMBER	PART NUMBER	PER CAR	DESCRIPTION
			Oil Pressure Gage Pipes
0116-33	532630	1	PIPE w/NUTS, oil pressure gage - C-K
	182099	1	NUT, pipe (gage end) 1/8"
	- - - -	1	NUT, pipe (coupling end) 1/8"
	536795	1	CLIP, to dash - LHC.
0116-39	530096	1	COUPLING, gage pipe flexible - C-K
	g141539	1	BUSHING, reducer

0117 - OIL PRESSURE RELIEF VALVE (Plate 01-9)

0117-1	440657	1	VALVE, oil pressure relief
0117-3	440784	1	SPRING, relief valve
0117-4	440655	1	RETAINER
	- - - -	1	COTTER 1/8" x 1 1/4"

0118 - OIL FILTER AND PIPES (Plate 01-9)

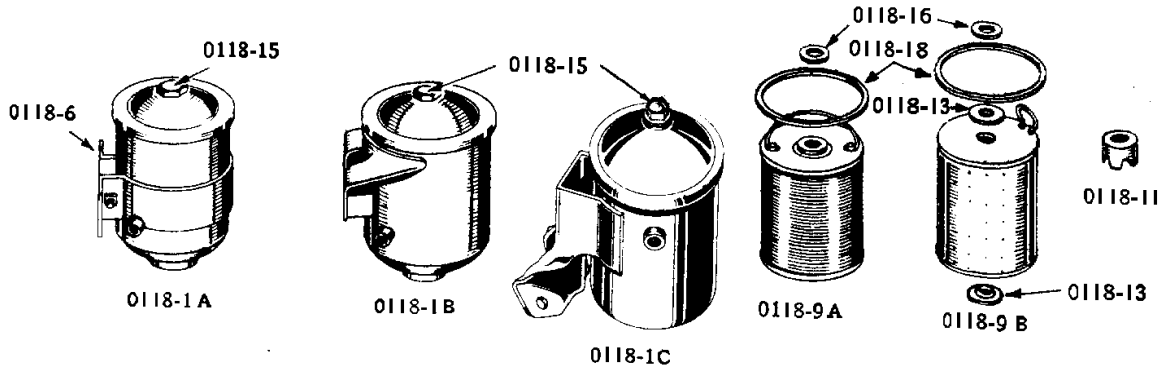

Oil Filter Cartridge - Replaceable Cartridge Type

0118-1A	NOT 56J		
0118-1B	NOT 56J		
0118-1C	6489723	1	OIL FILTER
	g122122	2	SCREW, to cyl. head 3/8" - 16 x 3/4"
	g120382	2	WASHER, lock 3/8"
0118-9A	NOT 56J		
0118-9B	SP-50057	1	CARTRIDGE KIT (consists of cartridge & cover gasket)
0118-11	NOT 56J		
0118-13	NOT 56J		
0118-15	NOT 56J		
0118-16	NOT 56J		
0118-18	440816	1	GASKET, oil filter cover (incl. in cartridge kit)
			Oil Filter Pipes
0118-21	6489720	1	PIPE w/NUTS, inlet
	g137397	2	NUT, pipe 1/4"
0118-25	6489721	1	PIPE w/NUTS, outlet
	g137397	2	NUT, pipe 1/4"
	g137405	1	CONNECTOR, inlet pipe (head end)
	g137421	1	ELBOW, outlet pipe (filter end)
	g137405	1	CONNECTOR, outlet pipe (cylinder end)

* - Use as required

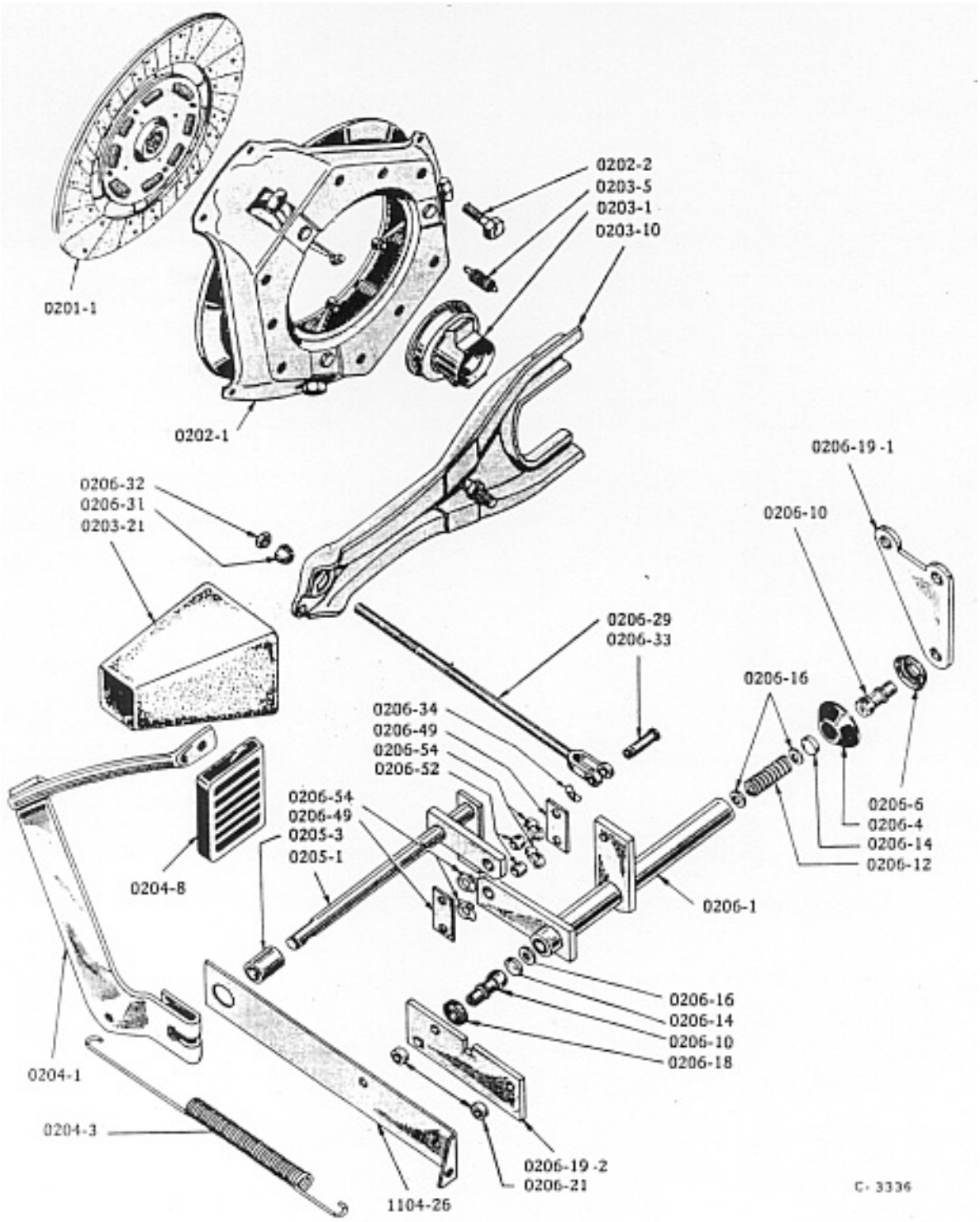

CLUTCH, PEDAL AND RELEASE MECHANISM—Model 56J
(Used with Overdrive Transmission)

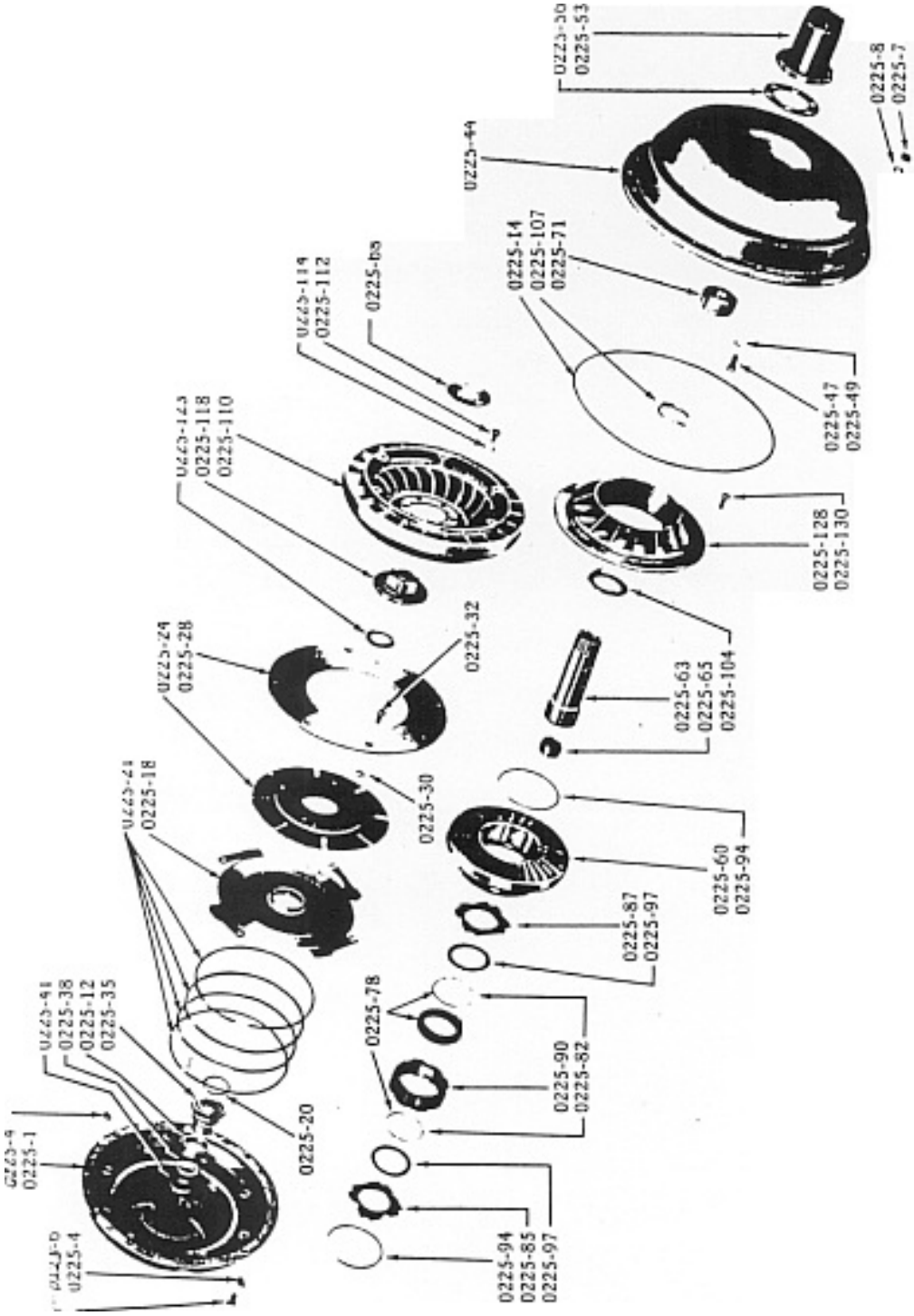

C-3339

TORQUE CONVERTER—Model 56J

ILLUST. NUMBER	PART NUMBER	PER CAR	DESCRIPTION
0201 - CLUTCH DRIVEN PLATE AND FACINGS (Plate 02-2)			
			Driven Plate w/Facings
0201-1	473176	1	PLATE
			Driven Plate Facings
0201-2,3	▲- - -	2	FACING, plate
0202 - CLUTCH COVER AND PRESSURE PLATE (Plate 02-2)			
			Clutch Cover w/Pressure Plate
0202-1	403502	1	COVER w/PLATE
0202-2	6302440	6	SCREW, to flywheel 5/16" - 18 x 1"
0202-3	▲- - -	1	COVER, clutch - not furnished separately order - COVER w/PRESSURE PLATE
0202-4	▲- - -	1	PLATE, pressure
0203 - CLUTCH RELEASE BEARING, SHAFT AND LEVERS (Plate 02-2)			
0203-1	465306	1	BEARING and COLLAR, release (Includes wear plate and spring)
0203-5	6302404	1	SPRING, release bearing collar
0203-10	6403546	1	LEVER and BALL STUD, release
	- - - -	1	NUT, ball stud hex. 7/16" - 20
	- - - -	1	WASHER, sh'prf. 7/16"
0203-21	316419	1	BOOT, release lever
	- - - -	1	RIVET, oval hd. 9/64" x 9/16" split
0204 - CLUTCH PEDAL AND SPRING (Plate 02-2)			
0204-1	536147	1	PEDAL, clutch - LHC
	- - - -	1	BOLT, to shaft clamping 3/8" - 24 x 2" - LHC
	g120369	1	NUT, hex. 3/8" - 24
	g120394	1	WASHER, plain 3/8"
	g120382	1	WASHER, lock 3/8"
0204-3	536743	1	SPRING, pedal, pull back
(1108-7)	530366	1	GROMMET, pedal (illust. plate 11-3, 4)
0204-8	537288	1	PAD, pedal
	g120369	1	NUT, hex. 3/8" - 24
	g138489	1	WASHER, sh'prf. 3/8"
	- - - -		SHIELD, pedal splash - see groups 1507, 2338
0205 - CLUTCH PEDAL SHAFT (Plate 02-2)			
0205-1	1540227	1	SHAFT, pedal
0205-3	1540231	1	SPACER, shaft
	194557	1	BUSHING, pedal shaft (located in tube welded in frame)
	536385	1	SLEEVE, pedal shaft lubrication (incl. bushings and grease fittings (with power brakes)
	679093	1	GREASE FITTING, sleeve

ILLUST. NUMBER	PART NUMBER	PER CAR	DESCRIPTION
0206 - CLUTCH OPERATING SHAFT AND RODS (Plate 02-2)			
0206-1	1539422	1	SHAFT and LEVERS, operating
0206-4	534872	1	BOOT, operating shaft - LHC
0206-6	1539432	1	RETAINER, operating shaft boot
0206-10	534833	2	BALL STUD, operating shaft bearing
	g124934	2	NUT, ball stud 1/2" - 20
	- - - -	2	WASHER, sh'prf. 1/2"
0206-12	1539428	1	SPRING, operating shaft thrust
0206-14	1539426	2	WASHER, operating shaft (felt)
0206-16	g120393	2	WASHER, operating shaft thrust
0206-18	529527	1	GREASE SEAL, operating shaft (rubber)
0206-19(-1)	1539433	1	BRACKET, oper shaft supt. to trans. - LHC
0206-19(-2)	1540226	1	BRACKET, oper. shaft supt. to master cyl. - LHC
0206-21	680445	2	SPACER, to M/C (for 1540226)
	g180079	2	SCREW, to trans. 5/16" - 18 x 1"
	- - - -	2	NUT, to M/C hex. 3/8" - 24 - for 1540226
	g120394	2	WASHER, spacer plain 3/8" - for 1540226
0206-29	1539448	1	ROD, oper. shaft to release shaft lever
0206-31	6302481	1	NUT, adjusting (special)
0206-32(?)	g120368	1	NUT, locking hex. 5/16" - 24
0206-33	42x115	1	PIN, to operating shaft
0206-34	184291	1	WASHER, spring
	- - - -	1	COTTER, 3/32" x 3/4"
0206-49	1540225	2	LINK, operating shaft
0206-52	1539446	2	SPACER, link
0206-54	1540509	4	WASHER, link spring
	g181004	2	BOLT, thru link 5/16" - 24 x 1-1/8"
	g120368	2	NUT, hex. 5/16" - 24
	g120214	2	WASHER, lock 5/16"
0207 - CLUTCH PILOT BEARING (Plate 01-10)			
0207-1	421731	1	BEARING, pilot (ball type) (located in crankshaft)
0209 - CLUTCH AND FLYWHEEL HOUSING (Plate 01-10)			
0209-1	465143	1	HOUSING, clutch (with OD.)
0209-3	g179861	8	SCREW, to cyl. block 7/16" - 14 x 1-3/8"
	- - - -	8	WASHER, lock 7/16"
0220 - TORQUE CONVERTER (Plate 02-4)			
0220-1	6479085	1	CONVERTER COMPLETE, torque Used before transmission serial number S-2463.
	6489485	1	CONVERTER COMPLETE, torque Used on and after transmission serial number S-2463.
	g451010	4	NUT, self locking hex. 3/8" - 24
0225 - TORQUE CONVERTER PARTS (Plate 02-4)			
0225-1	6470308	1	HOUSING w/BUSHING, converter clutch
0225-4	g127950	2	PLUG, drain 1/8" - 27 pipe
0225-6	450670	24	BOLT, to pump 5/16" - 24 x 1"
0225-7	g451006	24	NUT, hex. 5/16" - 24
0225-8	433134	24	WASHER, plain 5/16"
0225-12	6470309	1	BUSHING, converter clutch housing
0225-14	450660	1	SEAL, converter clutch housing to pump
0225-18	6470331	1	PISTON, converter clutch
0225-20	423417	1	RING, inner, converter clutch piston

ILLUST. NUMBER	PART NUMBER	PER CAR	DESCRIPTION	
0225-21	450217	4	RING, outer, converter clutch piston	
0225-24	450678	1	PLATE and FACINGS, converter clutch driven	
0225-28	450216	1	PLATE, converter clutch pressure	
0225-30	423425	4	SPACER, to housing	
0225-32	450338	8	SCREW, to housing 5/16" - 18 x 11/16" (special)	
0225-35	6479113	1	HUB, converter clutch	
0225-38	6470312	1	BEARING, converter clutch hub	
0225-41	6470310	1	PLATE, converter hub bearing	
0225-44	465327	1	PUMP, converter	
0225-47	443159	6	SCREW, to shaft 5/16" - 24 x 11/16" (special)	
0225-49	470013	6	WASHER, lock 5/16" (special)	
0225-53	450257	1	SHAFT and BUSHING, converter pump - Used before transmission serial number S-2463. If shaft is required because of spline damage order 6484523 rotor and shaft kit Group 0823.	
0225-53	6489467	1	SHAFT and BUSHING, converter pump - Used on and after transmission serial number S-2463.	
0225-56	421599	1	GASKET, converter pump shaft	
0225-60	450208	1	REACTOR, converter	
0225-63	6470318	1	SHAFT w/BUSHING, converter reactor	
0225-65	6484045	1	BUSHING, converter reactor shaft	
0225-68	6480797	1	THRUST WASHER, converter reactor shaft	
0225-71	▲6480810	1	SPACER, converter reactor shaft thrust - ▲Not available, (use 450209)	
0225-71	450209	1	#SPACER, converter reactor shaft thrust #(When used as replacement for 6480810 spacer omit 6479191 washer.)	
0225-78	450218	1	CLUTCH, converter reaction (consists of : 28 - 410901 Sprags and 2 - 458294 Springs)	
0225-80	410901	28	SPRAG, converter reaction clutch	
0225-82	458294	2	SPRING, converter reaction clutch sprag	
0225-85	6480070	1	PLATE, front converter reaction bearing	
0225-87	6489322	1	PLATE, rear, converter reaction bearing	
0225-90	470238	1	RACE, converter reaction clutch outer	
0225-94	450378	2	RING, converter reaction clutch retaining	
0225-97	450219	2	THRUST WASHER, converter reaction clutch	
0225-104	470219	1	WASHER, converter reaction clutch	
0225-107	▲6479191	1	WASHER, spring converter reaction clutch (▲Not available - used with 6480810 spacer)	
0225-110	423675	1	TURBINE, first, converter	
0225-112	443159	6	SCREW, to hub 5/16" x 11/16" (special)	
0225-114	433134	6	WASHER, lock 5/16" (special)	
0225-118	6470338	1	HUB, converter first turbine	
				Thick
0225-123	6470320	*	THRUST WASHER, converter first turbine hub	.062
0225-123	6470321	*	THRUST WASHER, converter first turbine hub	.070
0225-123	6470322	*	THRUST WASHER, converter first turbine hub	.078
0225-123	6470323	*	THRUST WASHER, converter first turbine hub	.086
0225-123	6470324	*	THRUST WASHER, converter first turbine hub	.094
0225-123	6470325	*	THRUST WASHER, converter first turbine hub	.102
0225-123	6470326	*	THRUST WASHER, converter first turbine hub	.110
0225-128	434425	1	TURBINE, second, converter	
0225-130	443166	6	SCREW, to first turbine 1/4" - 20 x 7/8" (special)	
	g120392	6	WASHER, lock 1/4"	

ILLUST. NUMBER	PART NUMBER	PER CAR	DESCRIPTION
0230 - TORQUE CONVERTER HOUSING (see Plate 01-4)			
0230-1	470101	1	HOUSING, torque converter (illust. plate 08-9)
	g141240	1	PIN, dowel to engine 3/8" x 3/4"
	g127950	3	PLUG, hex. hd. 1/8" - 27 pipe (brass)
	470226	1	PLUG, discharge
	450346	1	PLUG, intake (small)
	450504	1	PLUG, intake (large)
	- - - -	1	GASKET, discharge plug (copper & asbestos)
	g179861	8	SCREW, to engine 7/16" - 14 x 1-3/8"
	470059	8	WASHER, plain 7/16"
	g120383	8	WASHER, lock 7/16"
	g179862	9	SCREW, to trans. 7/16" - 14 x 1-1/2"
	470058	1	SCREW, to trans. (special)
	470059	10	WASHER, plain (special)
	- - - -	9	WASHER, sh'prf. 7/16"
0230-20	410864	1	BUSHING, torque converter housing (illust. plate 08-9)
0230-25	6470205	1	SEAL, torque converter housing
0230-28	450345	1	GASKET, housing to trans.

* - Use as required
▲ - Not available

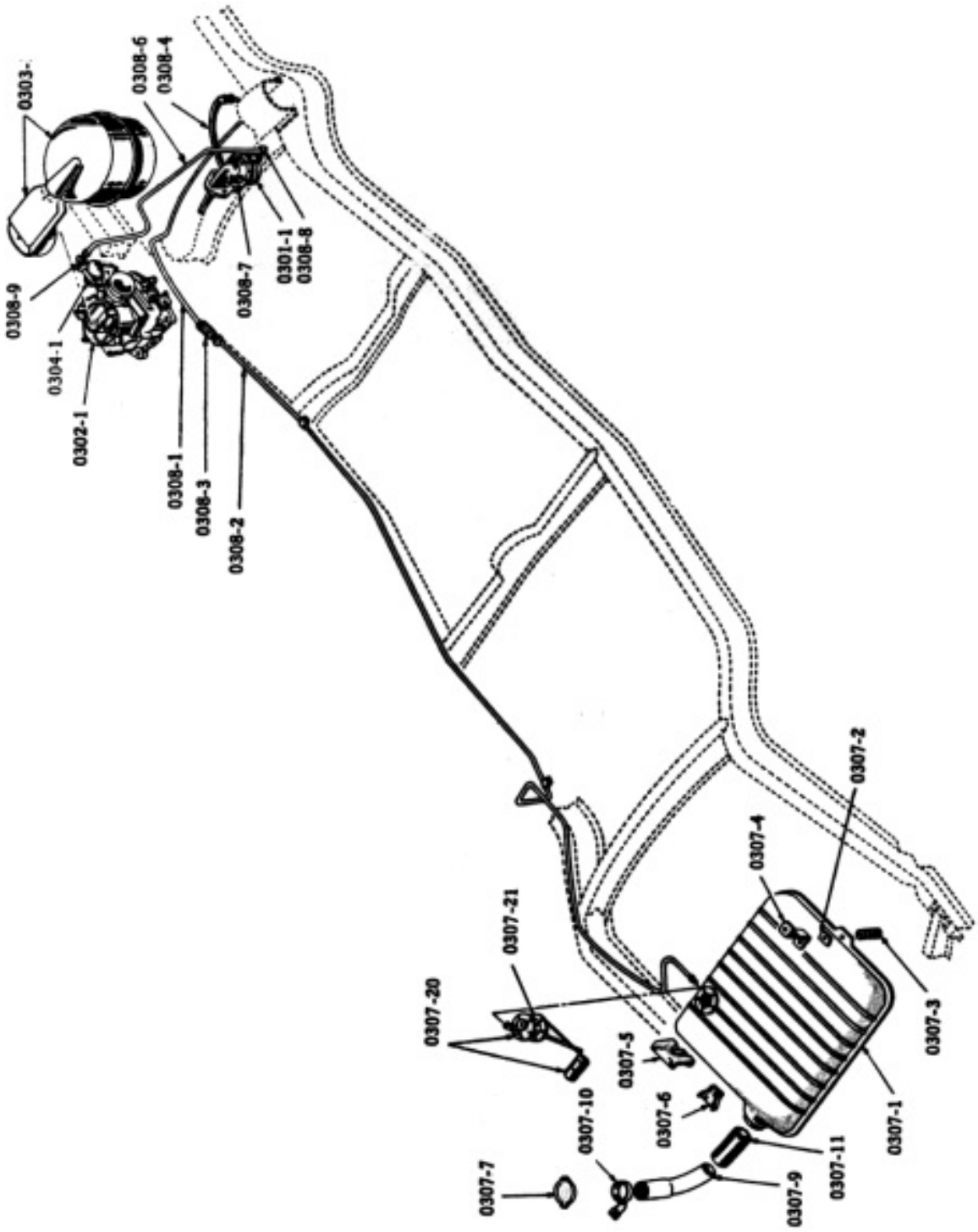

FUEL SYSTEM—Model 56J

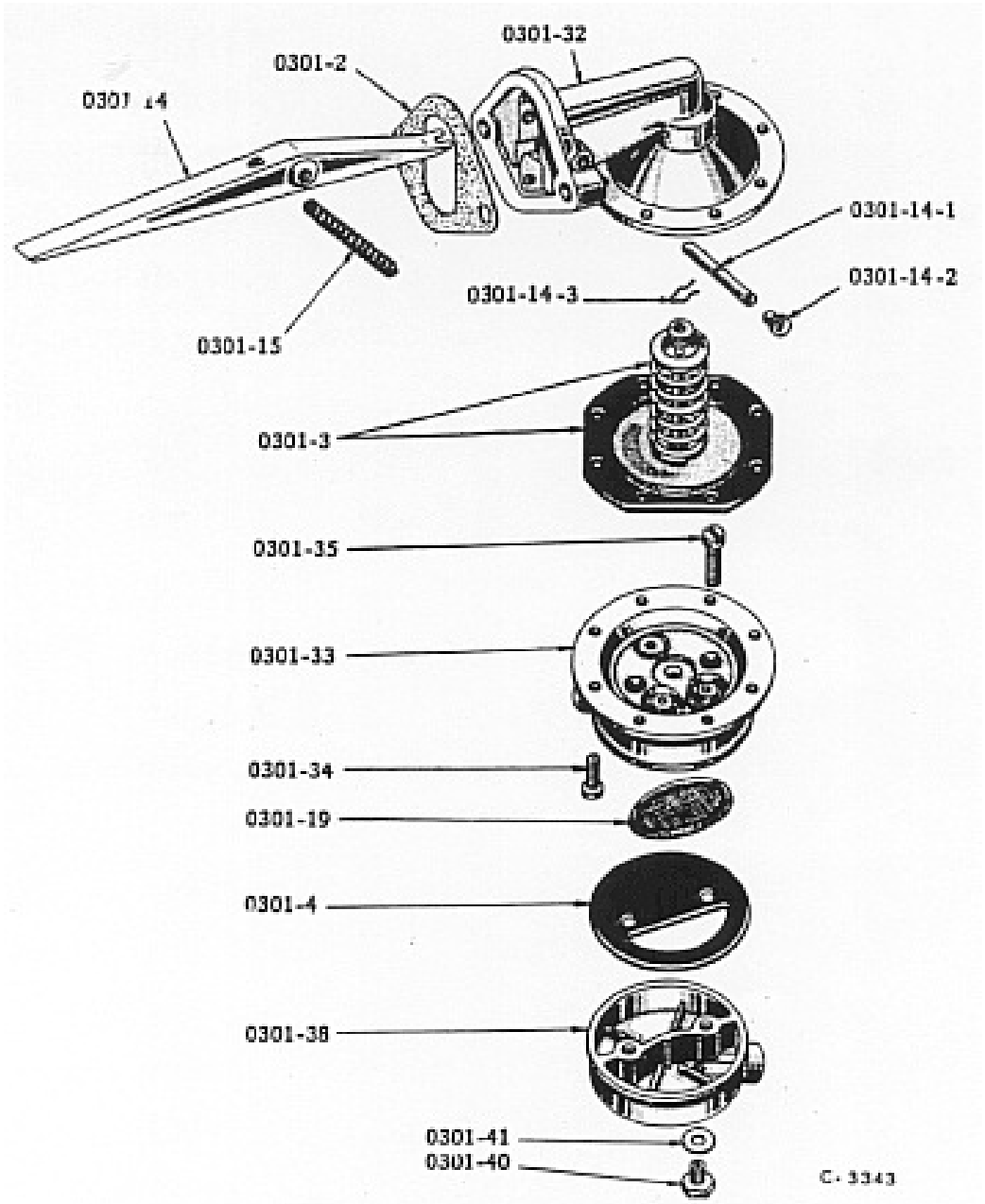

FUEL PUMP—Model 56J

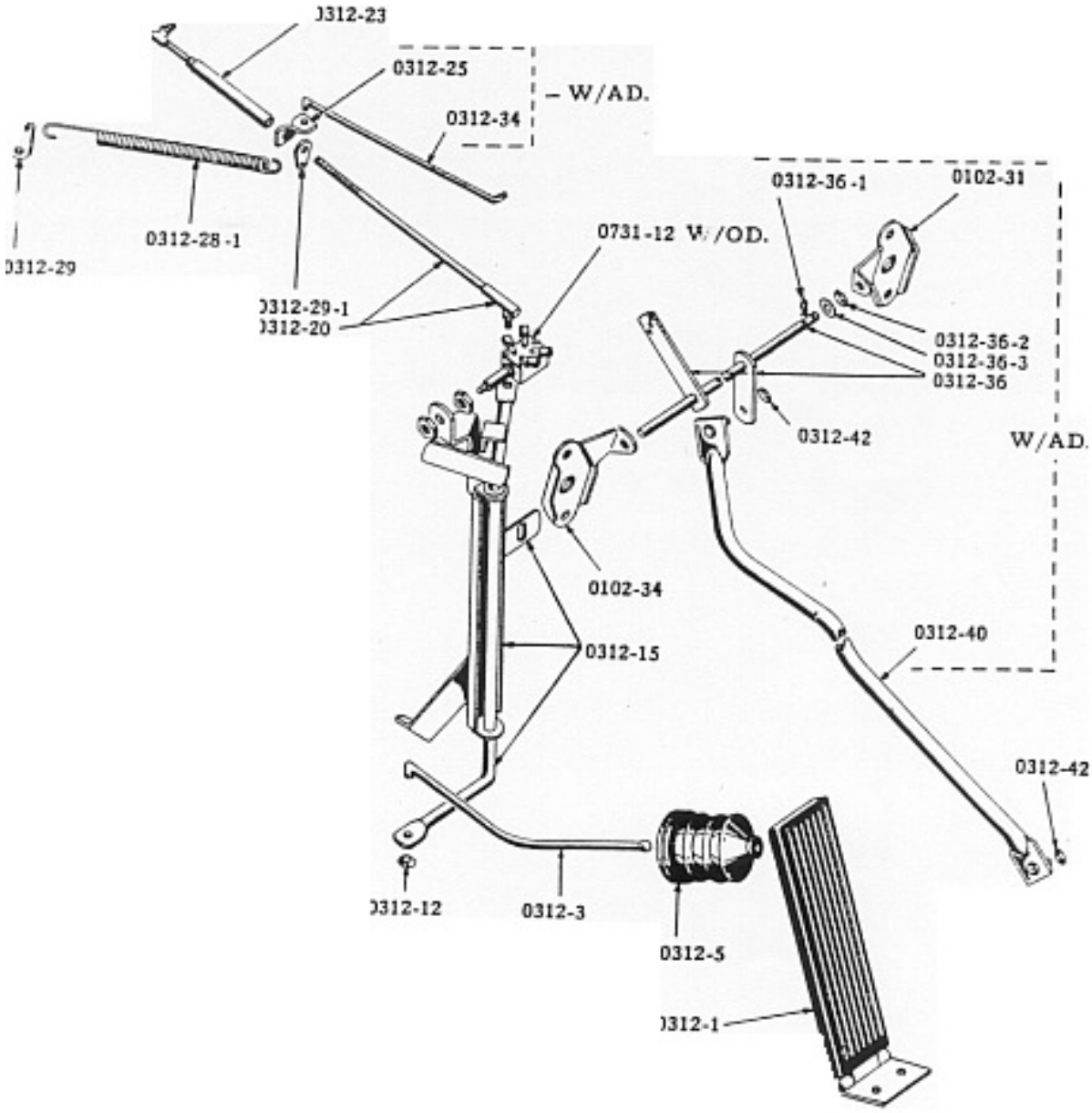

C-3352

ACCELERATOR CONTROLS—Model 56J
used with Overdrive and Automatic Transmission

ILLUST. NUMBER	PART NUMBER	PER CAR	DESCRIPTION
0301 - FUEL PUMP (Plate 03-4)			
0301-1	440629	1	FUEL PUMP, assy.
	g120248	2	SCREW, to timing gear cover 3/8" x 1-1/4"
	g120394	2	WASHER, plain 11/32"
	g120382	2	WASHER, lock 3/8"
0301-2	440048	1	GASKET, fuel pump
0301-2-4	440682	1	ECCENTRIC, fuel pump actuating (Illust. plate 01-10)
(0104-11)	440372	1	SCREW, to camshaft 3/8" - 16 x 1" (Illust. plate 01-10)
0301-2-5	- - - -	1	WASHER, special (Illust. plate 01-10)
	6484039	1	FUEL PUMP REPAIR KIT
0301-3	- - - -	1	DIAPHRAGM and LINK, (fuel pump (use 6484039)
0301-4	436994	1	DIAPHRAGM, fuel pump outlet
0301-5	- - - -	1	SPRING, fuel pump diaphragm (not sold separately)
0301-8	- - - -	2	VALVE, fuel pump (not sold separately)
0301-14	- - - -	1	ARM, fuel pump rocker (not sold separately)
0301-14-1	436992	1	PIN, rocker arm
0301-14-2	6484036	1	PLUG, pin hole
0301-14-3	536951	1	SPRING, pin
0301-15	6484038	1	SPRING, fuel pump rocker arm
0301-19	436990	1	FILTER, fuel pump
			(The following 5 items are sold only as part of pump)
0301-32	- - - -	1	BODY, fuel pump rocker arm
0301-33	- - - -	1	HOUSING and VALVES, fuel pump valve
0301-34	- - - -	8	SCREW, to rocker arm body
0301-35	- - - -	2	SCREW, to cover
0301-38	- - - -	1	COVER, fuel pump valve housing and filter
0301-40	436988	1	PLUG, drain
0301-41	436989	1	GASKET

ILLUST. NUMBER	PART NUMBER	PER CAR	DESCRIPTION

0302 - CARBURETOR AND AUTOMATIC CHOKE (Plate 03-2)

4 Barrel Carburetor - Carter

0302-1	6480506	1	CARBURETOR, model WCFB 2394S
	440625	4	STUD, to manifold 5/16" - 24 x 1-1/2"
	g121917	4	NUT, hex. 5/16" - 24
	g120214	4	WASHER, lock 5/16"
0302-2	440613	1	GASKET, carb. to manifold

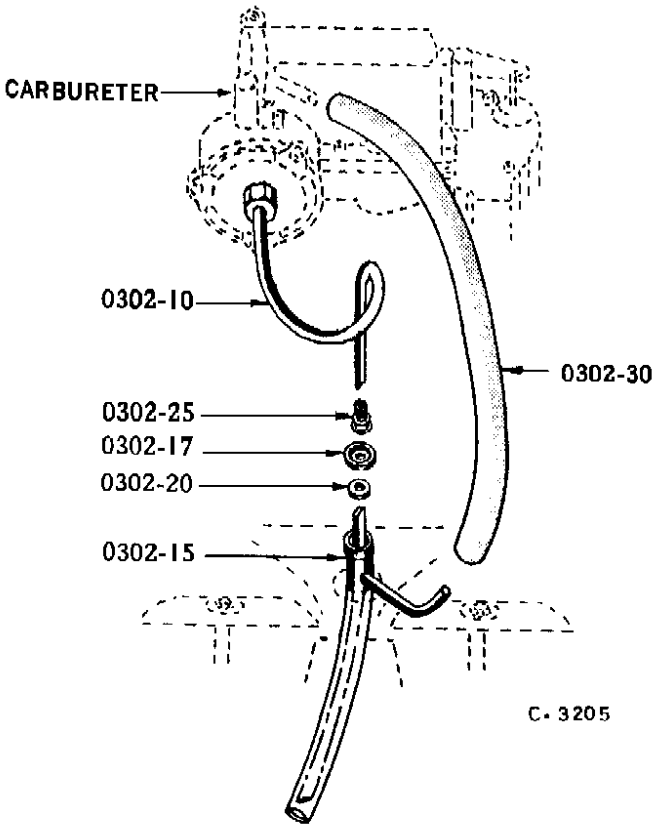

Automatic Choke Pipes and Fittings

0302-10	440770	1	PIPE, auto. choke to manifold
	- - - -	1	NUT, pipe 1/4"
0302-15	440769	1	TUBE, auto, choke heater
0302-17	NOT 56J		
0302-20	NOT 56J		
0302-25	NOT 56J		

ILLUST. NUMBER	PART NUMBER	PER CAR	DESCRIPTION

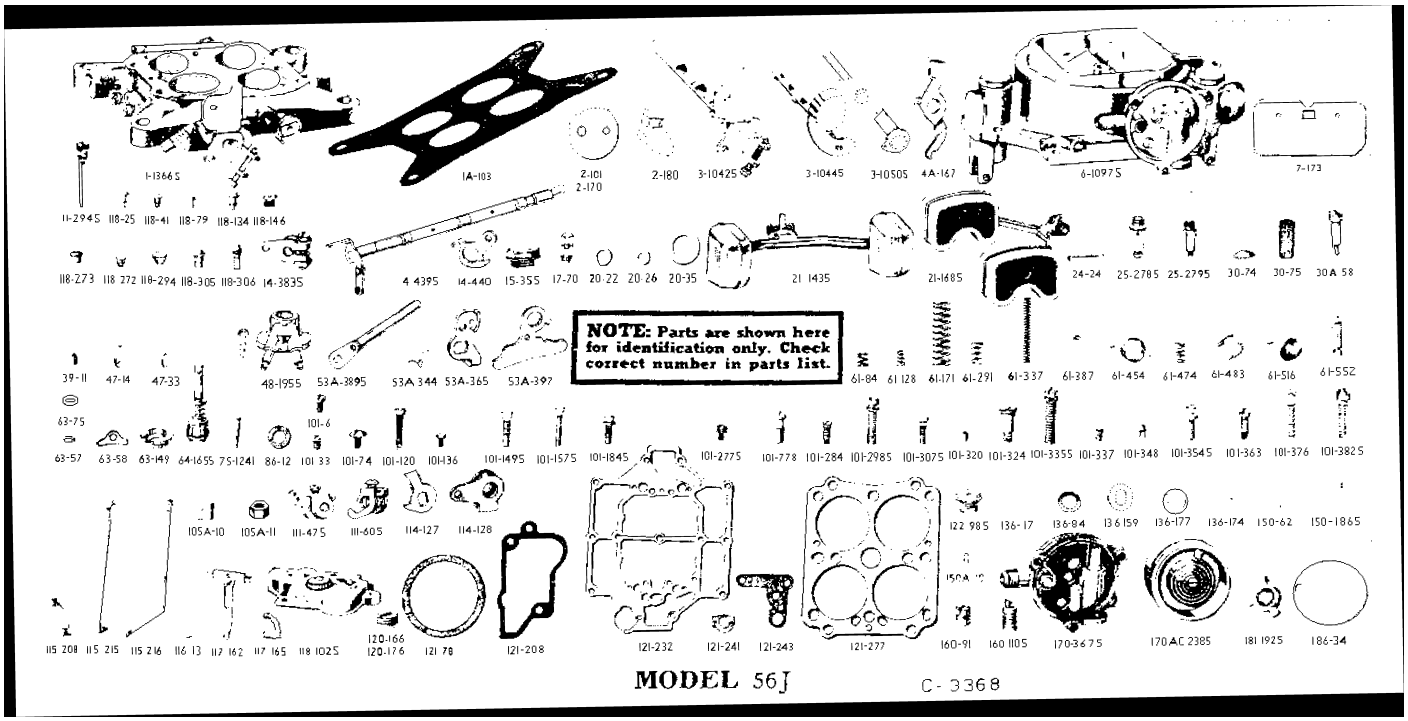

CARBURETOR - CARTER MODEL 2394S (4 BARREL)

Carter Part Numbers are also the illustration numbers

Carter No.	Studebaker No.		
1829	6484549	1	REPAIR KIT, carb (for 2394) consists of:
			1 - 1A-103 Gasket — 1 - 64-165s Plunger & Rod
			2 - 11-294s Jet — 2 - 75-1241 Metering Rod
			1 - 17-70 Needle — 1 - 115-208 Rod
			2 - 20-35 Gasket — 1 - 116-13 Ball
			1 - 25-278s Needle & Seat — 2 - 120-166 Jet
			1 - 25-279s Needle & Seat — 2 - 120-176 Jet
			1 - 30-75 Strainer — 1 - 121-78 Gasket
			1 - 53A-344 Arm — 1 - 121-208 Gasket
			1 - 61-171 Spring — 1 - 121-232 Gasket
			1 - 61-322 Spring — 1 - 121-241 Gasket
			1 - 61-382 Spring — 1 - 121-243 Gasket
			1 - 61-483 Spring — 1 - 121-277 Gasket
			1 - 63-57 Retainer — 5 - 150A-10 Spring
283	6484550	1	GASKET SET, comp. assortment (for 2394) consists of the following gaskets:
			1 - 1A-103 Flange — 1 - 121-208 Dust Cover
			2 - 20-22 Needle Seat — 1 - 121-232 Air Horn
			1 - 20-26 Plug — 1 - 121-241 Jet Housing
			1 - 20-35 Strainer — 1 - 121-243 Piston Hsg
			1 - 121-78 Coil Housing — 1 - 121-277 Body Flange

ILLUST. NUMBER	PART NUMBER	PER CAR	DESCRIPTION
Carter No.	**Studebaker No.**		
1-1366s	6484155	1	BODY, throttle (for 2394)
1A-103	440613	1	GASKET, to manifold (for 2394) (incl. in 283 set)
2-101	198938	2	VALVE, primary throttle (for 2394)
2-170	6484156	2	VALVE, secondary throttle (for 2394)
2-180	6484157	2	VALVE, auxiliary throttle (for 2394)
3-1042s	6484158	1	SHAFT and LEVER, primary throttle valve (for 2394)
3-1004s	6484159	1	SHAFT and WEIGHT, aux. throttle valve (for 2394)
3-1050s	6484160	1	SHAFT and DOG, secondary throttle valve (for 2394)
4A-167	6484161	1	DOG, throttle shaft (for 2394)
6-1097s	6484162	1	BODY, choke (air horn) (for 2394)
7-173	537122	1	VALVE, choke
11-294s	6484163	2	JET, low speed (for 2394)
11B-35	518771	4	PLUG, high speed passage
11B-41	673029	2	PLUG, choke piston passage
11B-79	673031	4	PLUG, vacuum passage
11B-134	537123	1	PLUG, balance passage
11B-146	436632	2	PLUG, level sight (for 2394)
11B-223	537124	4	PLUG, nozzle passage
11B-272	436633	2	PLUG, rivet (for 2394)
11B-294	537125	2	PLUG, idle port
11B-305	537126	1	PLUG, fuel passage - short
11B-306	537127	2	PLUG, fuel passage - long
14-383s	436634	1	LEVER and SCREW, choke (for 2394)
14-439s	537131	1	SHAFT, lever and link, choke piston
14-440	537132	1	SHAFT, cam trip
15-35s	198391	2	NUT w/GASKET, strainer
17-70	410761	1	NEEDLE, pump check (for 2394)
20-22	637401	2	GASKET, needle seat
20-26	637402	1	GASKET, pump discharge passage plug
20-35	198392	2	GASKET, bowl strainer
21-143s	436637	1	FLOAT and LEVER, primary (for 2394)
21-168s	6484164	1	FLOAT and LEVER, secondary (for 2394)
24-24	518858	2	PIN, float lever
25-278s	537136	1	NEEDLE and SEAT, primary
25-279s	537137	1	NEEDLE and SEAT, secondary
30-74	537139	1	STRAINER, secondary fuel inlet
30-75	537140	1	STRAINER, bowl
30A-58	537141	2	SCREW, idle adjustment
39-11	637410	2	SCREW, choke valve
47-14	537143	1	PLUG, choke housing
47-33	6484165	1	PLUG, spark port (for 2394)
48-195s	458713	1	JET and HOUSING, pump (for 2394)
53A-389s	537145	1	LEVER and COUNTERSHAFT, pump operating
53A-344	436643	1	ARM, vent (for 2394)
53A-365	537147	1	LEVER, secondary operating
53A-397	6484166	1	ARM, lockout (for 2394)
61-84	644929	2	SPRING, idle adj. screw
61-128	644151	1	SPRING, connector rod
61-171	197347	1	SPRING, pump (lower)
61-291	537150	1	SPRING, throttle lever adj. screw
61-332	458714	1	SPRING, vacuum piston (for 2394)
61-382	537151	1	SPRING, metering rod
61-454	537153	1	SPRING, fast idle cam
61-474	436649	1	SPRING, bowl vent. (for 2394)
61-483	537154	1	SPRING, secondary throttle return

ILLUST. NUMBER	PART NUMBER	PER CAR	DESCRIPTION
Carter No.	**Studebaker No.**		
61-516	537155	1	SPRING, countershaft
61-552	6484167	1	SPRING, throttle flex. (for 2394)
63-35	644152	1	RETAINER, connector rod spring
63-57	537157	1	RETAINER, intake check ball
63-58	519690	3	RETAINER, coil housing
63-149	436950	1	RETAINER, bowl vent. spring (for 2394)
64-165s	6484168	1	PLUNGER, ROD, SPRING and RETAINER, pump (for 2394)
75-1241	6484169	2	METERING ROD - std. (for 2394)
75-1296	6484567	2	METERING ROD - 1st size lean (for 2394)
75-1312U	6484600	2	METERING ROD - 2nd size lean (for 2394)
86-12	- - - -	4	WASHER, flange stud lock
101-6	644966	1	SCREW, pump arm clamp
101-33	537160	1	SCREW, metering rod arm clamp
101-74	518875	2	SCREW, throttle shaft
101-120	518792	1	SCREW, fast idle adj.
101-136	519699	3	SCREW, coil housing
101-149s	908616	1	SCREW and WASHER, body flange
101-152s	537161	1	SCREW and WASHER, air horn
101-184s	537162	2	SCREW and WASHER, dust cover
101-277s	436662	1	SCREW and WASHER, vent arm (for 2394)
101-278	537163	1	SCREW, pump jet and housing
101-284	537164	2	SCREW, piston housing
101-298s	537165	2	SCREW and WASHER, body flange
101-307s	537166	8	SCREW and WASHER, air horn
101-320	6484170	4	SCREW, auxiliary throttle valve (for 2394)
101-324	537167	1	SCREW, fast idle cam
101-335s	537168	7	SCREW and WASHER, air horn
101-337	537169	4	SCREW, secondary throttle valve
101-348	537170	4	SCREW, primary throttle valve
101-354s	537171	1	SCREW, choke lever
101-363	537172	1	SCREW, piston housing
101-376	458722	1	SCREW, throttle lever adj. (for 2394)
101-382s	537173	3	SCREW and WASHER, throttle body
105A-10	644969	1	NUT, choke lever clamp screw
105A-11	g114546	4	NUT, throttle body stud
111-47s	537175	1	ARM and SCREW, pump
111-60s	537176	1	ARM and SCREW, metering rod
114-127	537177	1	ARM, outer, throttle shaft
114-128	537178	1	ARM, inner, throttle shaft
115-208	537179	1	ROD, throttle operating
115-215	458726	1	ROD, choke connector (for 2394)
115-216	537180	1	ROD, throttle connector
116-13	644938	1	BALL, pump intake check
117-162	537182	1	LINK, vacuum piston
117-165	537183	1	LINK, pump connector
118-102s	458914	1	COVER, dust (for 2394)
120-166	436680	2	JET, primary metering rod (for 2394)
120-176	458319	2	JET, secondary metering (for 2394)
121-78	537187	1	GASKET, coil housing
121-208	537188	1	GASKET, dust cover
121-232	537189	1	GASKET, air horn
121-241	537190	1	GASKET, pump jet
121-243	537191	1	GASKET, piston housing
121-277	6484173	1	GASKET, throttle body (for 2394)
122-98s	458320	1	PLUG, pump relief valve (for 2394)

ILLUST. NUMBER	PART NUMBER	PER CAR	DESCRIPTION
Carter No.	**Studebaker No.**		
136-37	519708	5	WASHER, throttle connector and operating rods
136-84	537192	1	WASHER, spring
136-159	537193	1	WASHER, throttle shaft
136-172	537194	1	WASHER, secondary throttle shaft
136-174	458918	1	WASHER, throttle lever adj. screw (for 2394)
150-62	198933	1	PIN, choke piston
150-186s	436691	1	PIN and VALVE CAP (for 2394)
150A-10	644936	5	SPRING, pin
160-91	436692	1	PISTON, choke (for 2394)
160-110s	537195	1	PISTON and PIN, vacuum
170-367s	458919	1	HOUSING and PLUG, piston (for 2394)
170AC-238s	436695	1	COIL and HOUSING, thermostatic (for 2394)
181-192s	436697	1	CAM and SPRING, fast idle (for 2394)
186-34	537199	1	PLATE, choke baffle

0303 - CARBURETOR AIR CLEANER (Plates 01-4 and 03-2)

				Type Cleaner
0303-1	1540431	1	AIR CLEANER	wet
	536720	1	STUD, to carb. 1/4" - 20 x 4-1/2"	
	g148312	1	WING NUT, 1/4" - 20	
	538011	1	GASKET, air cleaner to carb. (for 1540431)	
0303-6	533570	1	SUPPORT, air cleaner (for 1540431)	wet
0303-8	531933	1	COVER, air cleaner	wet
	g103127	1	WING NUT, 1/4" - 20	wet
	530690	1	GASKET, air cleaner cover	

0304 - FUEL FILTER (Plate 01-4)

0304-1	440792	1	FILTER, fuel
	g443976	1	CONNECTOR, filter to carburetor
	6484041	1	BOWL, fuel filter
	6484044	1	CLAMP, retainer
	6484040	1	GASKET, fuel filter bowl
	6484042	1	FILTER, fuel filter bowl
	6484043	1	SPRING, bowl filter support

0307 - GASOLINE TANK, GAGE AND MOUNTINGS (Plate 03-2)

Tank and Mountings

0307-1	1540201	1	TANK, gasoline - 18 gal. - C-K
	g143997	1	PLUG, drain 1/4"
	12x188	1	BOLT, to right hanger 3/8" - 24 x 2" (before serial 6032932)
	653518	1	SHIM, insulating - rubber (before serial 6032932)
	194383	1	SPRING, coil (before serial 6032932)
	- - - -	1	NUT, slotted hex. 3/8" - 24 (before serial 6032932)
	- - - -	1	COTTER, 3/32" x 1" (before serial 6032932)
	g181636	1	BOLT, to right hanger 3/8" - 24 x 7/8" (on/after serial 6032932)
	g120369	1	NUT, hex. 3/8" - 24 (on/after serial 6032932)
	g120394	1	WASHER, plain 13/32" (on/after serial 6032932)
	g120382	1	WASHER, lock 3/8" (on/after serial 6032932)
	g181636	*	BOLT, to left hanger 3/8" - 24 x 7/8"
	g120369	2	NUT, hex. 3/8" - 24
	g120394	2	WASHER, plain 13/32"
	g120382	2	WASHER, lock 3/8"

ILLUST. NUMBER	PART NUMBER	PER CAR	DESCRIPTION	
	1160x1	*	PAD, gasoline tank - felt	
0307-2	(no listing found)			
0307-3	(no listing found)			
0307-4B	532064	1	HANGER, right, gas tank - C-K	
0307-5	532016	1	HANGER, left front, gas tank - W-F-Y-C-K	
0307-6	532015	1	HANGER, left rear, gas tank - W-F-Y-C-K	
	g181364	1	BOLT, right hanger to body 3/8" - 24 x 1" - C-K-D-P	
	g120369	1	NUT, hex. 3/8" - 24	
	- - - -	1	WASHER, upper, plain 3/8"	
	- - - -	1	WASHER, lower, plain 3/8"	
	g120382	1	WASHER, lock 3/8"	
	g181636	4	BOLT, left hanger to frame 3/8" - 24 x 7/8"	
	g120369	4	NUT, hex. 3/8" - 24	
	g120382	4	WASHER, lock 3/8"	
	AC-235	1	LOCKING FILLER CAP, gas tank (accessory)	
0307-7	523821	1	CAP, gas tank filler - std.	
0307-9	532101	1	NECK, gas tank filler - C-K	
0307-10	307842	1	CLAMP, gas tank filler neck - except D-P	
	g180020	1	BOLT, to fender 1/4" - 20 x 3/4"	
	1578x2	1	SPEED NUT 1/4"	
	g180022	1	BOLT, clamping 1/4" - 20 x 1"	
	1578x2	1	SPEED NUT 1/4"	
0307-11	531581	1	HOSE, gas tank filler neck	
	g111627	2	CLAMP, hose 2-5/8"	
0307-18	NOT 56J			
			Gasoline Gage (Tank Unit)	
0307-20	1540263	1	GAGE, gasoline - C-K-D	
	g145195	5	SCREW, to tank No. 10 x 5/8"	
	187763	5	WASHER, special	
	g132096	1	SCREW, terminal No. 10 - 32 x 1/4"	
	g138479	1	WASHER, shakeproof No. 10	
0307-21	521374	1	GASKET, gasoline gage	

0308 - FUEL (GASOLINE) LINES AND CONNECTIONS (Plate 03-2)

				5/16" O.D. x length
0308-1	1540187	1	PIPE w/NUTS, front, gas tank to fuel pump	45-3/4"
0308-2	525266	1	PIPE w/NUTS, rear, gas tank to fuel pump - C-K-Y	136-1/4"
	g137398	4	NUT, pipe 5/16"	
	525560	2	CLIP, front pipe to frame (snap type)	
	172653	4	CLIP, to frame (clamp type 13/16" long)	
	190470	3	CLIP, to frame (clamp type 1-13/16" long)	
	g177999	6	SCREW, to frame No. 14 x 1/2"	
	1501x10	2	SCREW, to frame 1/4" - 14 x 3/8"	
	g173741	1	SCREW, to frame 5/16" x 1/2"	
	41x302	2	WASHER, plain (rear pipe center clips)	
0308-3	g137414	1	UNION, gas tank to fuel pump pipe 5/16"	
0308-4	189888	1	COUPLING, gas tank to fuel pump pipe	
0308-6	6480512	1	PIPE w/NUTS, fuel pump to fuel filter	
	g137398	2	NUT, pipe 5/16"	
	908914	1	CLIP, to water manifold	
0308-7	g137422	1	ELBOW, gas tank to fuel pump pipe	
0308-8	g137422	1	ELBOW, fuel pump to carb. pipe (pump end)	
0308-9	g137422	1	ELBOW, fuel pump to carb. pipe (carb. end)	

ILLUST. NUMBER	PART NUMBER	PER CAR	DESCRIPTION

0312 - ACCELERATOR AND THROTTLE CONTROLS (Plate 03-12)

All Eight Cylinder Cars

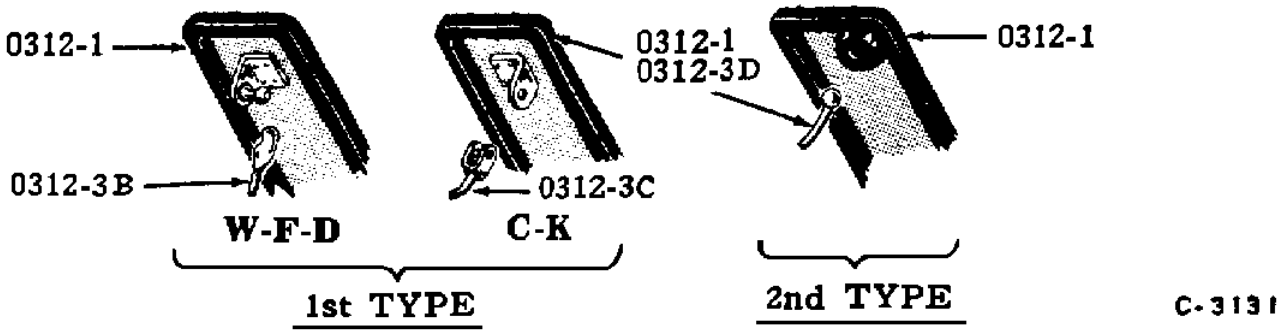

ACCELERATOR PEDAL

0312-1	535117	1	PEDAL, accelerator - C-K - LHC
	1501x25	2	SCREW, to toe board 1/4" - 20 x 3/4" - LHC
	AC-2029	1	COVER, accelerator pedal (accessory eq.)
0312-3	1539954	1	PUSH ROD, accelerator - LHC
0312-5	513536x1	1	SLEEVE, accelerator push rod - rubber - LHC
0312-12	184526	1	WASHER, spring
	g120392	1	WASHER, plain 9/32"
	- - - -	1	COTTER, 1/16" x 3/4"
0312-15	1539957	1	BELL CRANK, throttle control - w/OD. - LHC
0312-15	1539958	1	BELL CRANK, throttle control - w/AD. - LHC
	g120369	1	NUT, upper
	g120382	1	WASHER, lock 3/8"
	g132915	1	SCREW, stop No. 10 - 32 x 1"
	g120614	1	LOCK NUT No. 10 - 32
0312-20	1539966	1	ROD, bell crank to carburetor
	g120614	1	NUT, ball stud No. 10 - 32
	g106497	1	WASHER, lock No. 10
0312-23	6480849	1	END, bell crank to carb. rod adj.
	g120613	1	NUT, locking 1/4" - 28
	g120613	1	NUT, ball stud 1/4" - 28
	g121753	1	WASHER, lock 1/4"
0312-25	6489628	1	ADJUSTER, bell crank to carb. rod - w/AD.
	g120367	2	NUT, locking 1/4" - 28
0312-28-1	529301	1	SPRING, throttle return
0312-29	631469	1	CLIP, to manifold
0312-29-1	167320	1	CLIP to rod
0312-34	1539967	1	ROD, accel. rod to engine cross shaft - w/AD. - LHC
	- - - -	2	COTTER, 1/16" x 7/16"
0312-36	6480195	1	CROSS SHAFT, engine trans. cut out - w/AD. - LHC
0312-36-1	g451786	2	RETAINER, spring
0312-36-2	330344	1	WASHER, spring 5/16"
0312-36-3	473204	2	WASHER, plain 11/32"
0312-40	1539726	1	ROD, cross shaft to trans. - w/AD. - LHC
0312-41	g120367	1	NUT, locking 1/4" - 28
	g120614	1	NUT, to lever No. 10 - 32
	g106497	1	WASHER, lock No. 10

ILLUST. NUMBER	PART NUMBER	PER CAR	DESCRIPTION
0312-42	473022	2	WASHER, spring 1/4"
	g120392	2	WASHER, plain 9/32"
	- - - -	2	COTTER, 1/16" x 7/16"

* - Use as required
▲ - Not available

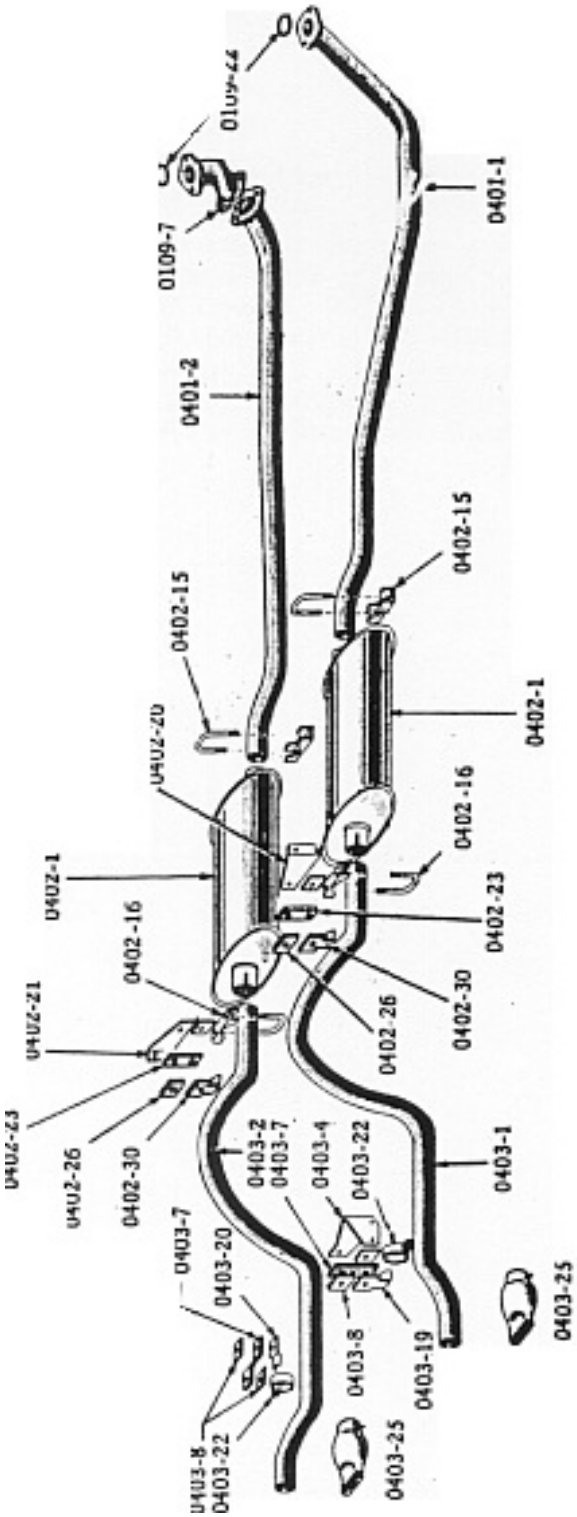

C-3361

DUAL EXHAUST SYSTEM—Model 56J

ILLUST. NUMBER	PART NUMBER	PER CAR	DESCRIPTION
0401 - EXHAUST PIPE AND SUPPORTS			
0401-1	1539897	1	PIPE, right, exhaust
0401-1-2	g122138	2	SCREW, right, to manifold 3/8" - 16 x 1-1/8"
	g180134	2	BOLT, left to manifold extension 3/8" - 16 x 2-1/2"
	g120377	2	NUT, hex. 3/8" - 16
	g120382	2	WASHER, lock 3/8"
0401-2	1539896	1	PIPE, left, exhaust
(0109-22)	440866	2	GASKET, exhaust pipe flange (incl. in 458672 set)
0402 - MUFFLER			
0402-1	1539838	2	MUFFLER
0402-15	521274	2	U-BOLT and SADDLE ASSY. (front of muffler)
0402-16	521273	2	U-BOLT and SADDLE ASSY. (rear of muffler)
0402-20	1539856	1	BRACKET, right, muffler support (rear of muffler)
0402-21	1539857	1	BRACKET, left, muffler support (rear of muffler)
	g186986	2	SCREW, to frame 5/16" x 1/2"
	g181636	2	BOLT, to frame 3/8" - 24 x 7/8"
	g120369	2	NUT, hex. 3/8" - 24
	g120394	2	WASHER, plain 13/32"
	g120382	2	WASHER, lock 3/8"
0402-23	526460	2	STRAP, muffler support (rear of muffler)
	g181338	4	BOLT, to bracket and support 5/16" - 24 x 7/8"
	g120368	4	NUT, hex. 5/16" - 24
0402-26	526347	4	WASHER, special
	g120214	4	WASHER, lock 5/16"
0402-30	526459	2	SUPPORT, muffler (rear of muffler)

0403 - OUTLET PIPE AND SUPPORTS

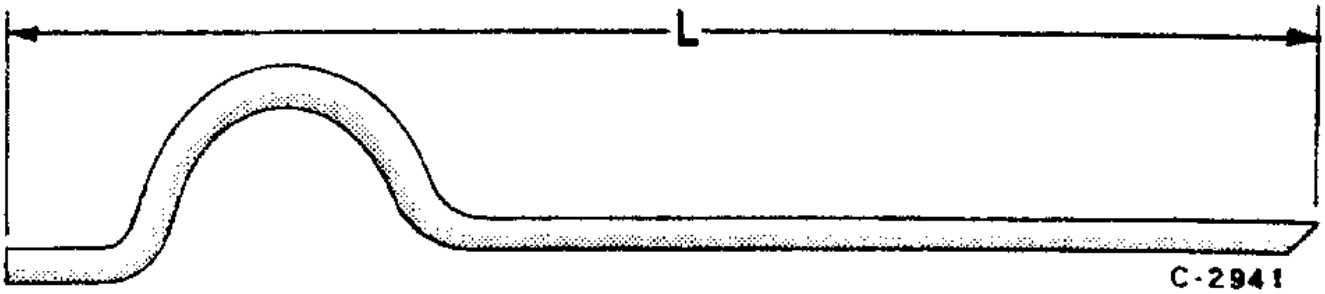

OUTLET (TAIL) PIPE

				Length
0403-1	536432	1	PIPE, right, outlet	58-7/32"
0403-2	1539794	1	PIPE, left, outlet	57-7/8"
0403-4	534861	1	BRACKET, right, outlet pipe support - C-K	
	g173741	2	SCREW, to frame 5/16" - 18 x 1/2" - C-K-D	
0403-7	526460	2	STRAP, outlet pipe support - C-K-D	
0403-8	g181608	3	BOLT, to brkt. and supt. 5/16" - 24 x 1"	
	g181004	1	BOLT, to gas tank hanger 5/16" - 24 x 1-1/8"	
	g120368	4	NUT, hex. 5/16" - 24	
0403-8	526347	4	WASHER, special	
	g120393	4	WASHER, plain 11/32"	
	g120214	4	WASHER, lock 5/16"	
0403-19	526486	1	SUPPORT, right, outlet pipe C-K-D	
0403-20	536621	1	SUPPORT, left outlet pipe C-K-D	
0403-22	526485	2	CLAMP, outlet pipe support	
	g181639	2	BOLT, clamping 3/8" - 24 x 1-1/4"	

ILLUST. NUMBER	PART NUMBER	PER CAR	DESCRIPTION
	g120369	2	NUT, hex. 3/8" - 24
	g120382	2	WASHER, lock 3/8"
0403-25B	AC-2754	2	DEFLECTOR, outlet pipe (incls. screw) C-K
	g448935	4	SCREW, retaining No. 10 x 1/2"

* - Use as required
▲ - Not available

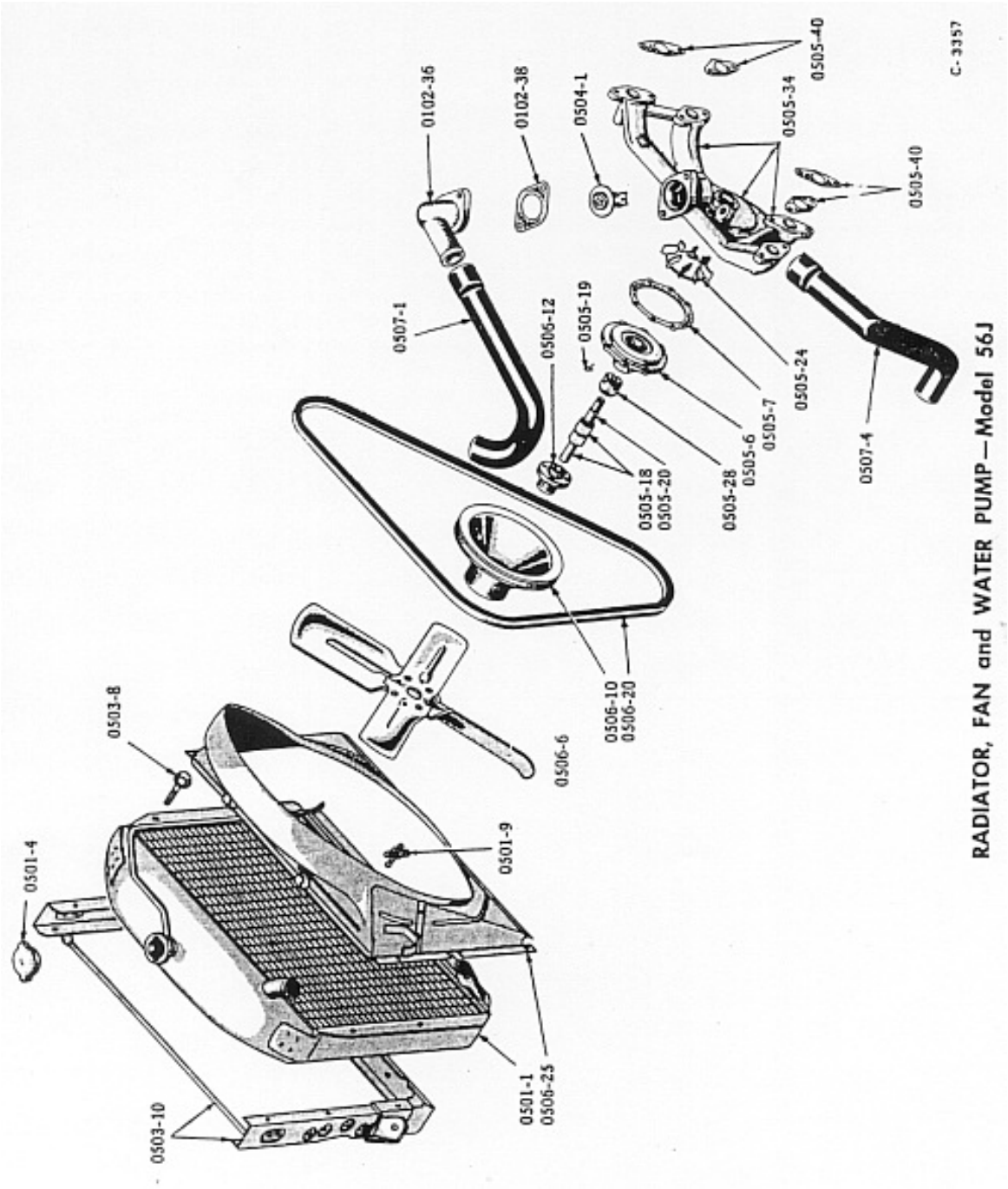

RADIATOR, FAN and WATER PUMP—Model 56J

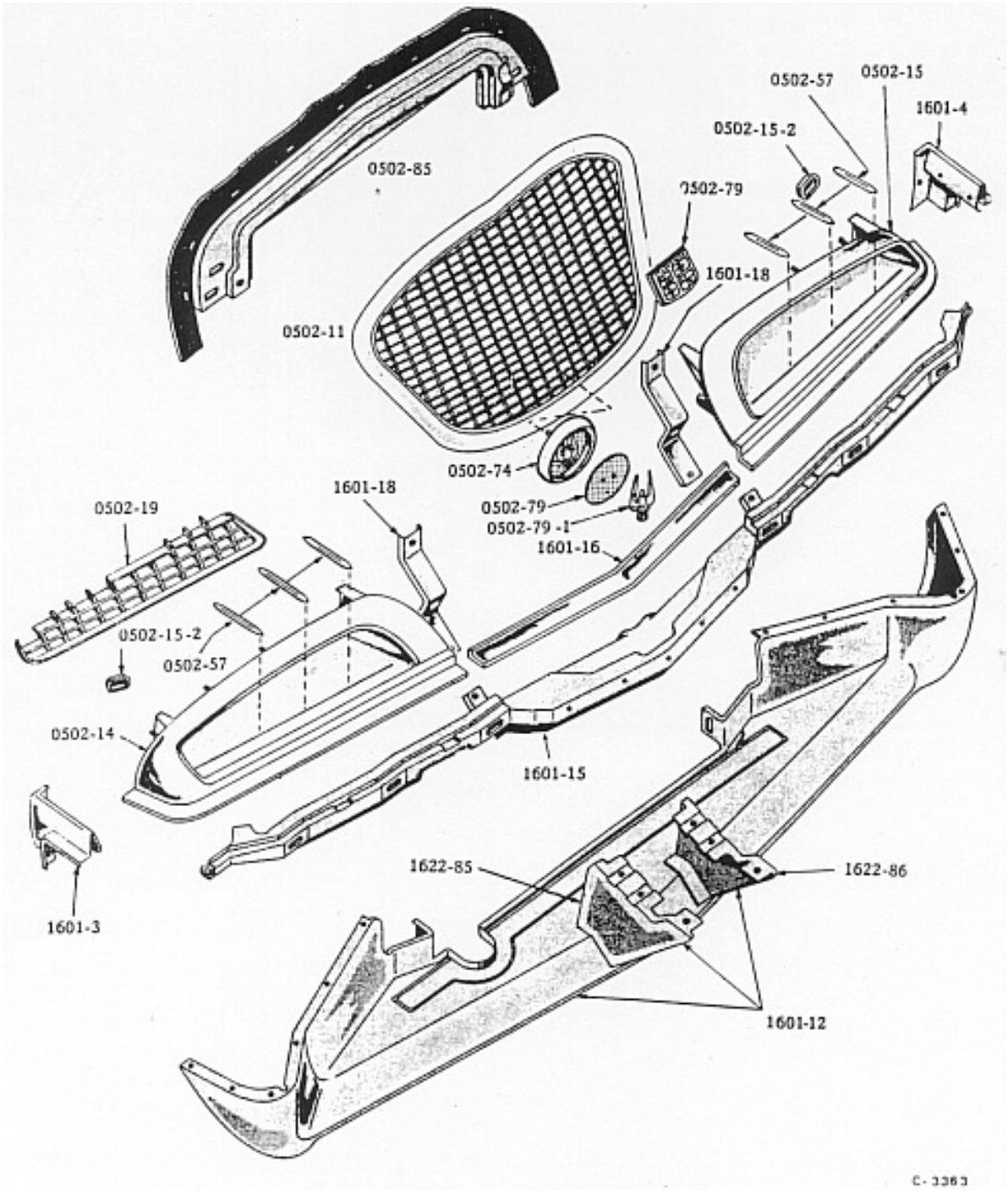

RADIATOR GRILLE—Models All 56, 57, 58 Except L (C-K)

ILLUST. NUMBER	PART NUMBER	PER CAR	DESCRIPTION
0501 - RADIATOR CORE AND FILLER CAP (Plate 05-3)			
0501-1	1539094	1	CORE, radiator - w/AD.
0501-1	1539095	1	CORE, radiator - w/OD.
0501-4	536502	1	CAP, radiator filler - 13 lbs. pressure
0501-9	2075x1	1	COCK, radiator drain
0502 - RADIATOR GRILLE (Plate 05-6)			
0502-11	1312189	1	GRILLE, radiator center (in hood) C-K
	1959x4	10	STUD, to hood 1/4" - 20 x 1"
	g440491	10	NUT and WASHER 1/4" - 20
	286845	10	STOOL, special
0502-14	1312030	1	GRILLE, right, radiator side - C-K
0502-15	1312031	1	GRILLE, left, radiator side - C-K
	1959x4	6	STUD, to fender 1/4" - 20 x 1"
	1959x10	2	STUD, to fender 5/16" - 18 x 1/4"
	1959x10	6	STUD, to air intake panel and brace - 5/16" - 18 x 1-1/4"
	1959x11	2	STUD, to air intake panel 5/16" - 18 x 1-3/4"
	g271172	6	NUT and WASHER, hex. 1/4" - 20
	g271184	10	NUT and WASHER, hex. 5/16" - 18
	g446470	2	WASHER, plain 3/8"
	g446363	8	WASHER, plain 3/8"
	308062	6	WASHER, special (for 1959x4 stud)
0502-15-2	308138	2	STOOL, to fender 5/16" stud
0502-19	NOT 56J		
0502-57	NOT 56J		
0502-74	NOT 56J		
0502-79	1314307	1	EMBLEM, center grille - C-K
	g271166	1	NUT and WASHER, to grille No. 10-24
	41x555	1	WASHER, plain
	1314479	1	LOCATOR
0502-79-1	NOT 56J		
0502-85	1312475	1	BAFFLE and SEAL, radiator upper air - C-K
	1905x14	4	SCREW and WASHER, to fender
0503 - RADIATOR MOUNTINGS (Plate 05-3)			
0503-8	g456643	6	SCREW, core to support 5/16" - 18 x 3/4"
0503-10	1312081	1	SUPPORT, radiator core - C-K
	304703	2	SPACER, support - C-K
	293686	2	BOLT, to frame 3/8" - 24 x 4-3/4"
	g120369	2	NUT, hex. 3/8" - 24
	41x557	*	WASHER, plain 3/8"
	g120382	2	WASHER, lock 3/8"
0504 - THERMOSTAT (Plate 05-3)			
0504-1	440066	1	THERMOSTAT, engine - std. - (opens at 170°)
0504-1	531470	1	THERMOSTAT, engine - low - (opens at 160°)
0504-1	532017	1	THERMOSTAT, engine - high - (opens at 180°)
0505 - WATER PUMP (Plate 05-3			
0505-1	458410	1	WATER PUMP and FAN HUB (illust. plate 01-9)
	g106324	6	SCREW, to water manifold 5/16" - 18 x 5/8"
	354310	6	WASHER, lock 5/16"
0505-6	440050	1	COVER, water pump
0505-7	440062	1	GASKET, water pump cover

ILLUST. NUMBER	PART NUMBER	PER CAR	DESCRIPTION
0505-18	426431	1	SHAFT and BEARING, water pump
0505-19	412404	1	LOCK RING
0505-20	412489	1	SLINGER, water pump shaft
0505-24	440566	1	IMPELLER, water pump
0505-28	426059	1	SEAL, water pump
0505-34	440386	1	MANIFOLD w/PLUGS, water
	g103879	1	PLUG, pipe 3/8"
	440075	1	PLUG, core hole 1-3/8"
	g106331	8	SCREW, to cyl. block 3/8" - 16 x 1-1/8"
	g120382	8	WASHER, lock 3/8"
0505-40	440333	4	GASKET, water manifold (incl. in 458670 set)

0506 - FAN AND BELT (Plate 05-3)

0506-6	1542138p	1	FAN BLADES - 4 blade
	g181313	4	SCREW, to hub 1/4" - 28 x 3/4"
	g120380	4	WASHER, lock 1/4"
0506-10	440773	1	PULLEY, fan drive
0506-12	440772	1	HUB, fan
0506-20	440448	1	BELT, fan
0506-25	1540294p	1	SHROUD, fan - K

0507 - RADIATOR AND WATER PUMP HOSE AND CONNECTIONS (Plate 05-3)

0507-1	1539087	1	HOSE, radiator inlet
	g111618	1	CLAMP, hose 1-13/16"
	g111620	1	CLAMP, hose 1-15/16"
0507-4	1539084	1	HOSE and SPRING, water pump inlet
	g111622	1	CLAMP, hose 2-1/8"
	g111623	1	CLAMP, hose 2-3/16"

* - Use as required
▲ - Not available

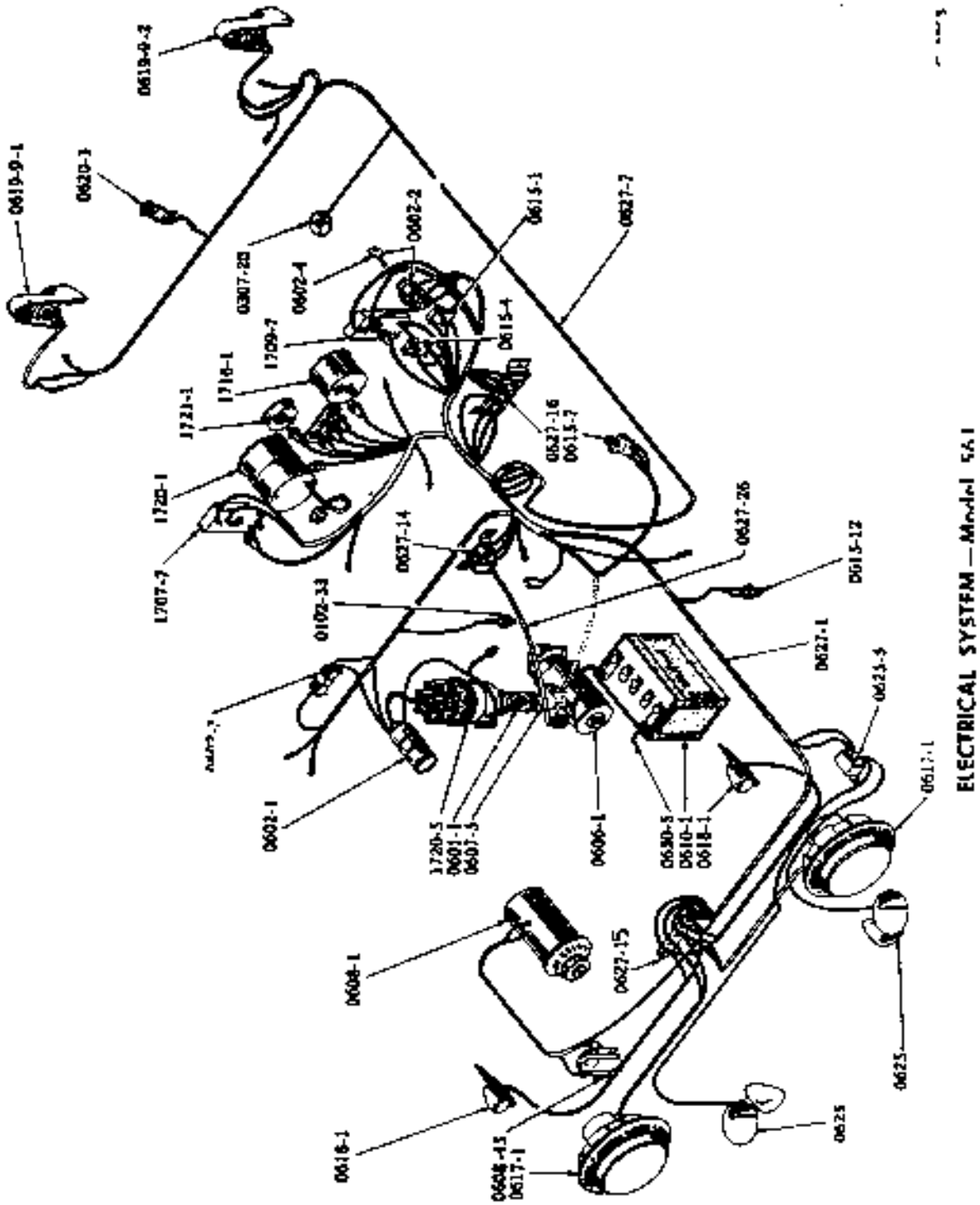

ELECTRICAL SYSTEM—Model 56J

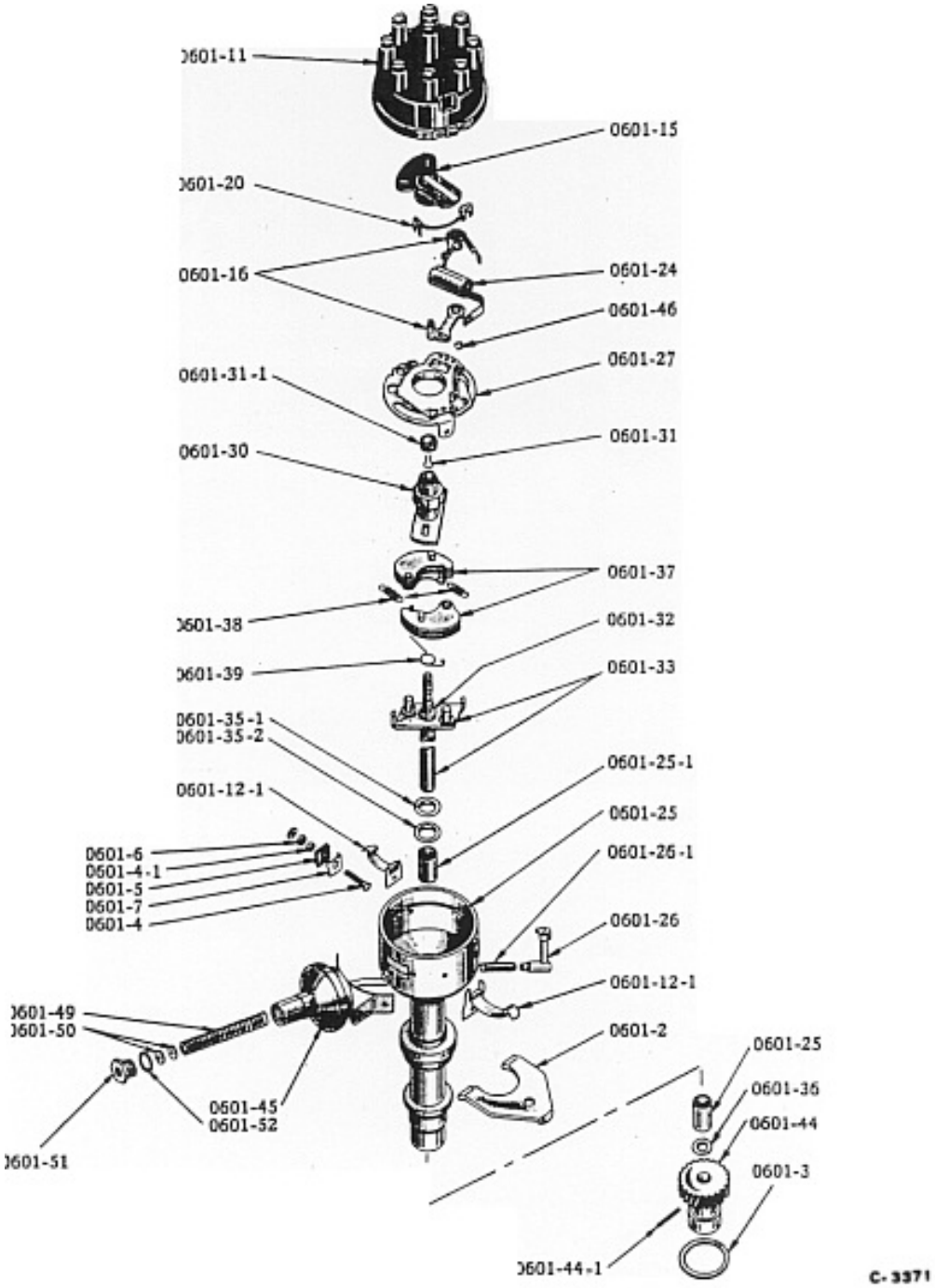

DISTRIBUTOR—Model 56J

ELECTRICAL
STARTER MOTOR - Model 56J

From page 163 - Chassis Parts Manual

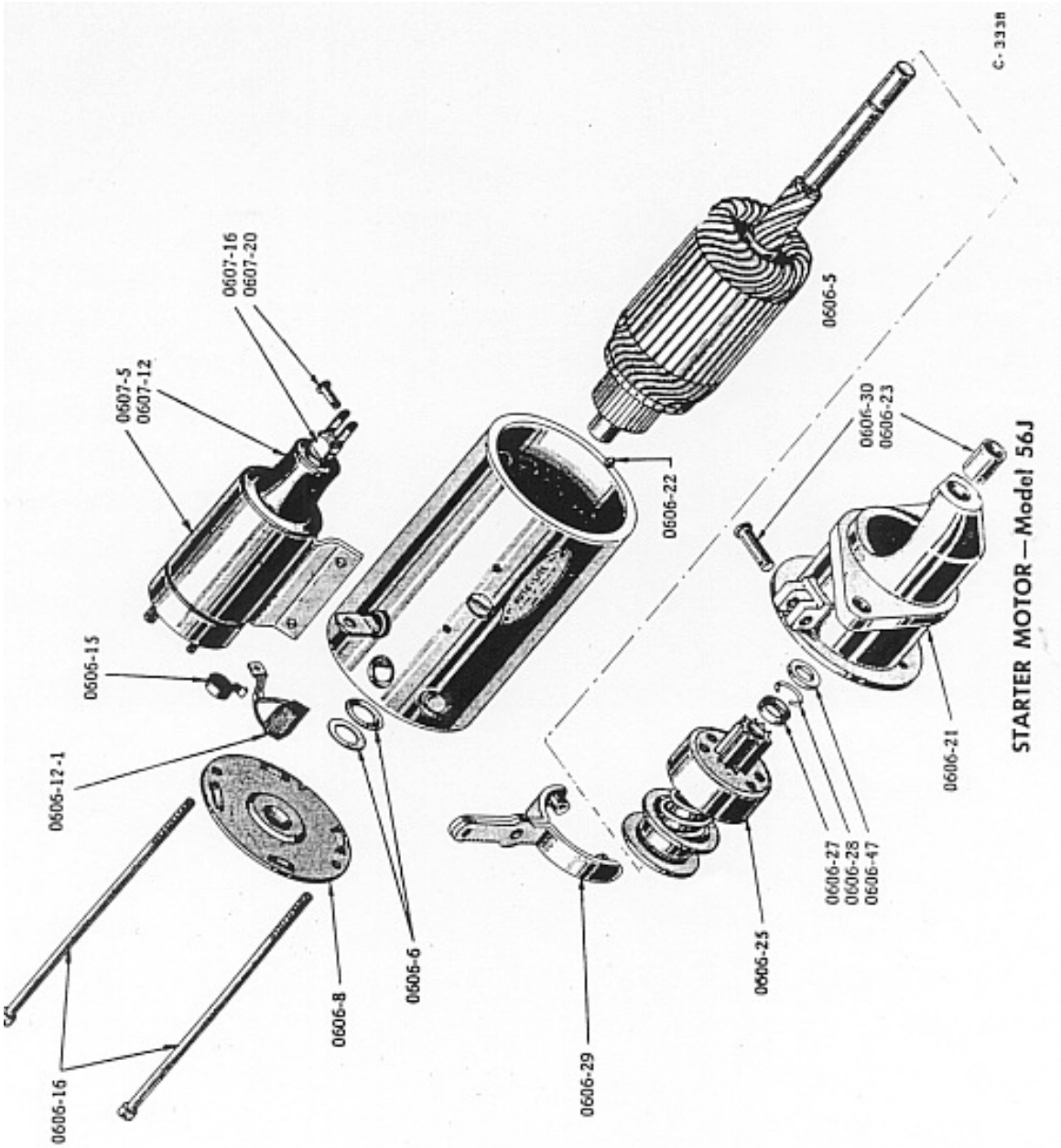

From page 169 - Chassis Parts Manual

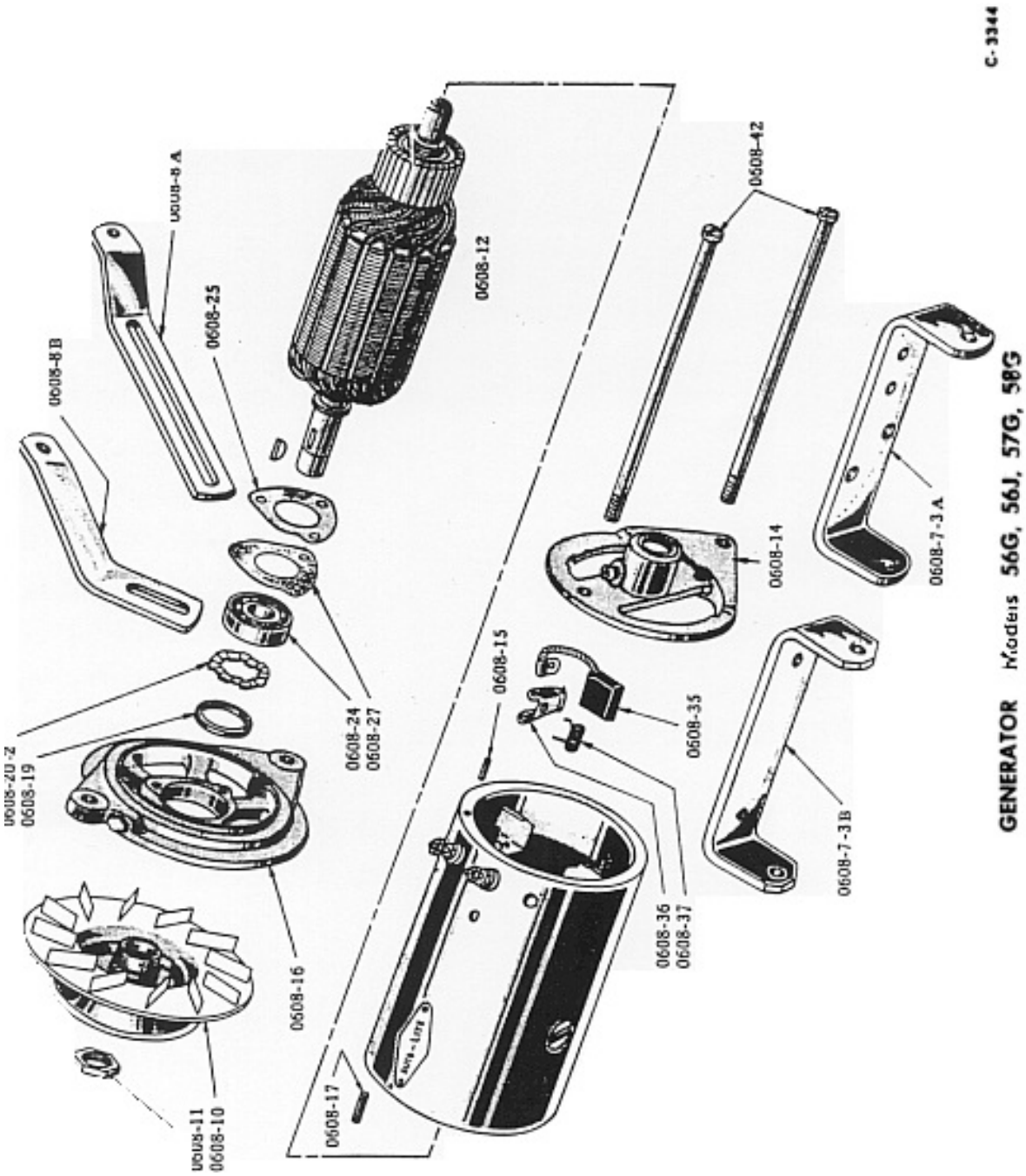

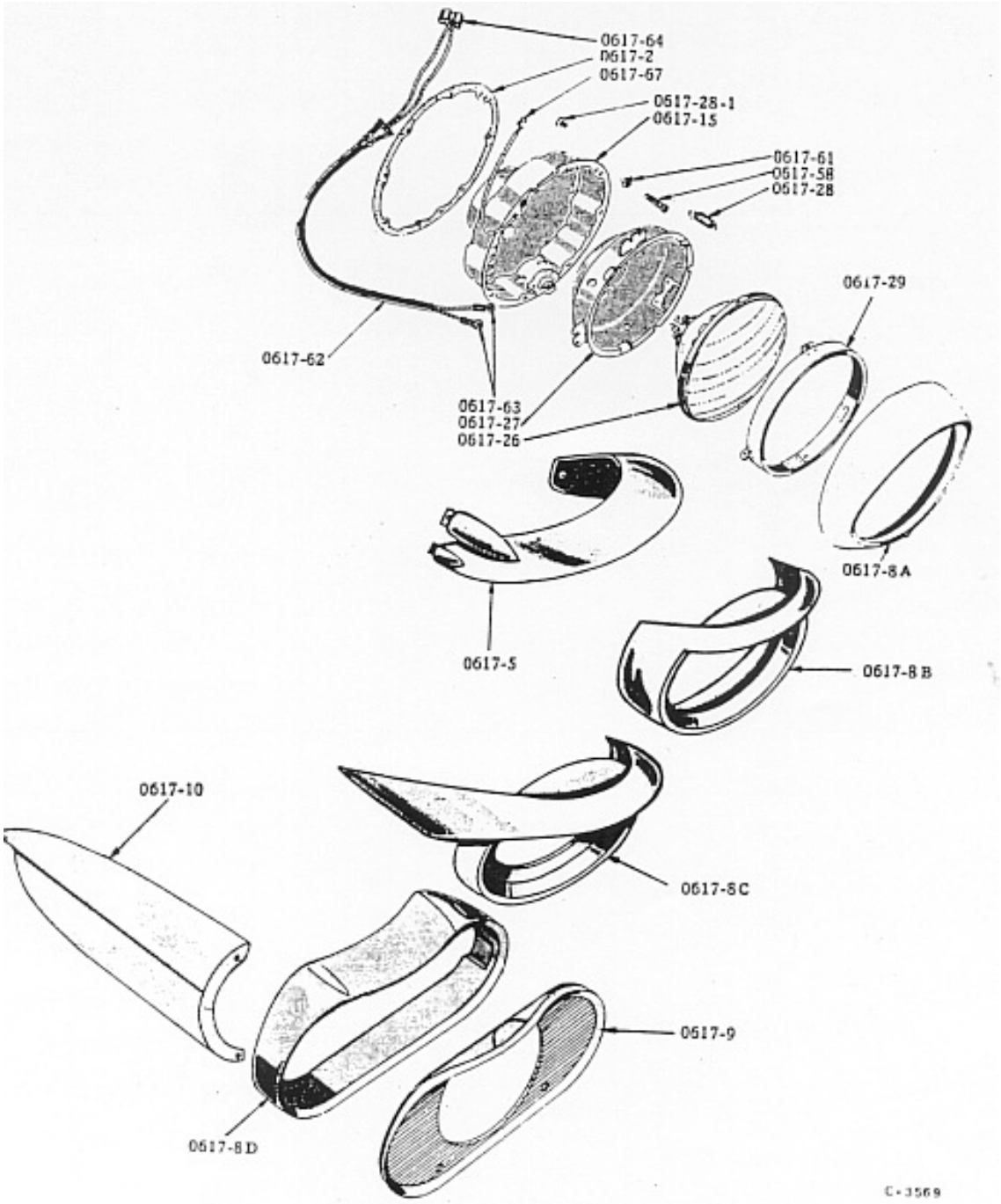

HEAD LAMP (SINGLE UNIT)

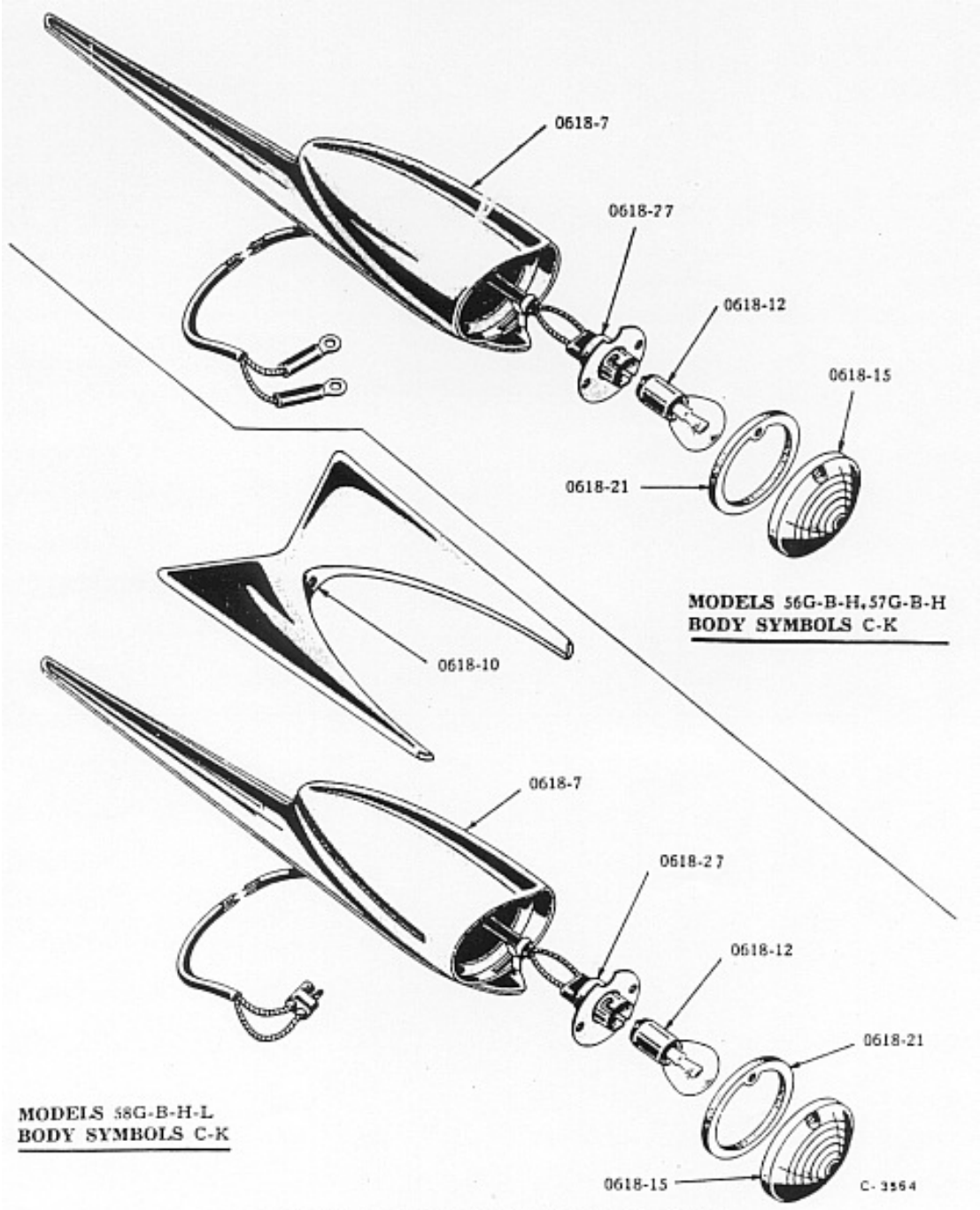

FENDER PARKING AND DIRECTIONAL LAMP

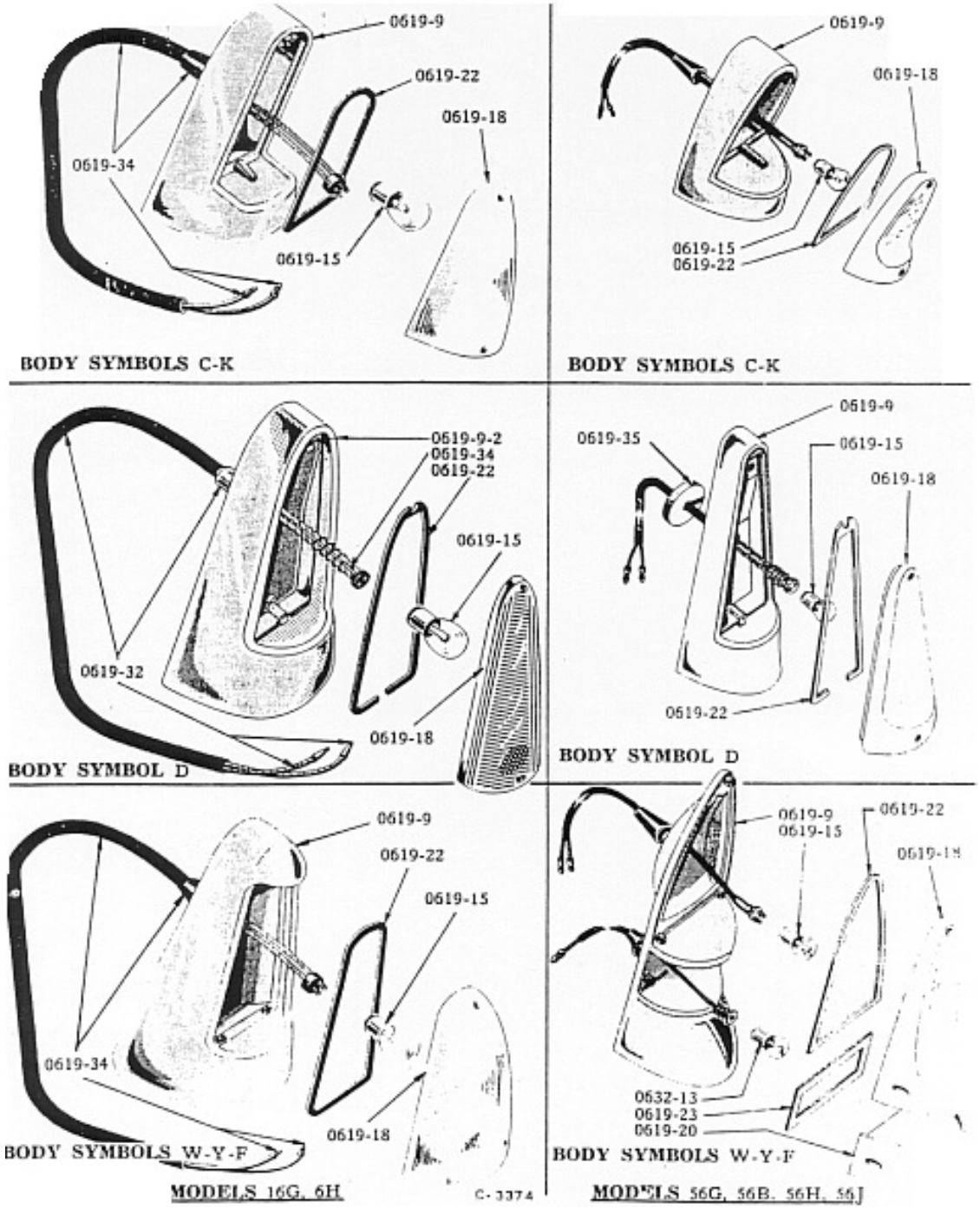
0619-9
0619-22
0619-18
0619-34
0619-15
BODY SYMBOLS C-K
0619-9
0619-18
0619-15
0619-22
BODY SYMBOLS C-K
0619-9-2
0619-34
0619-22
0619-15
0619-32
0619-18
BODY SYMBOL D
0619-9
0619-35
0619-15
0619-18
0619-22
BODY SYMBOL D
0619-9
0619-22
0619-15
0619-34
0619-18
BODY SYMBOLS W-Y-F
MODELS 16G, 6H
C-3374
0619-9
0619-15
0619-22
0632-13
0619-23
0619-20
BODY SYMBOLS W-Y-F
MODELS 56G, 56B, 56H, 56J

TAIL LAMPS

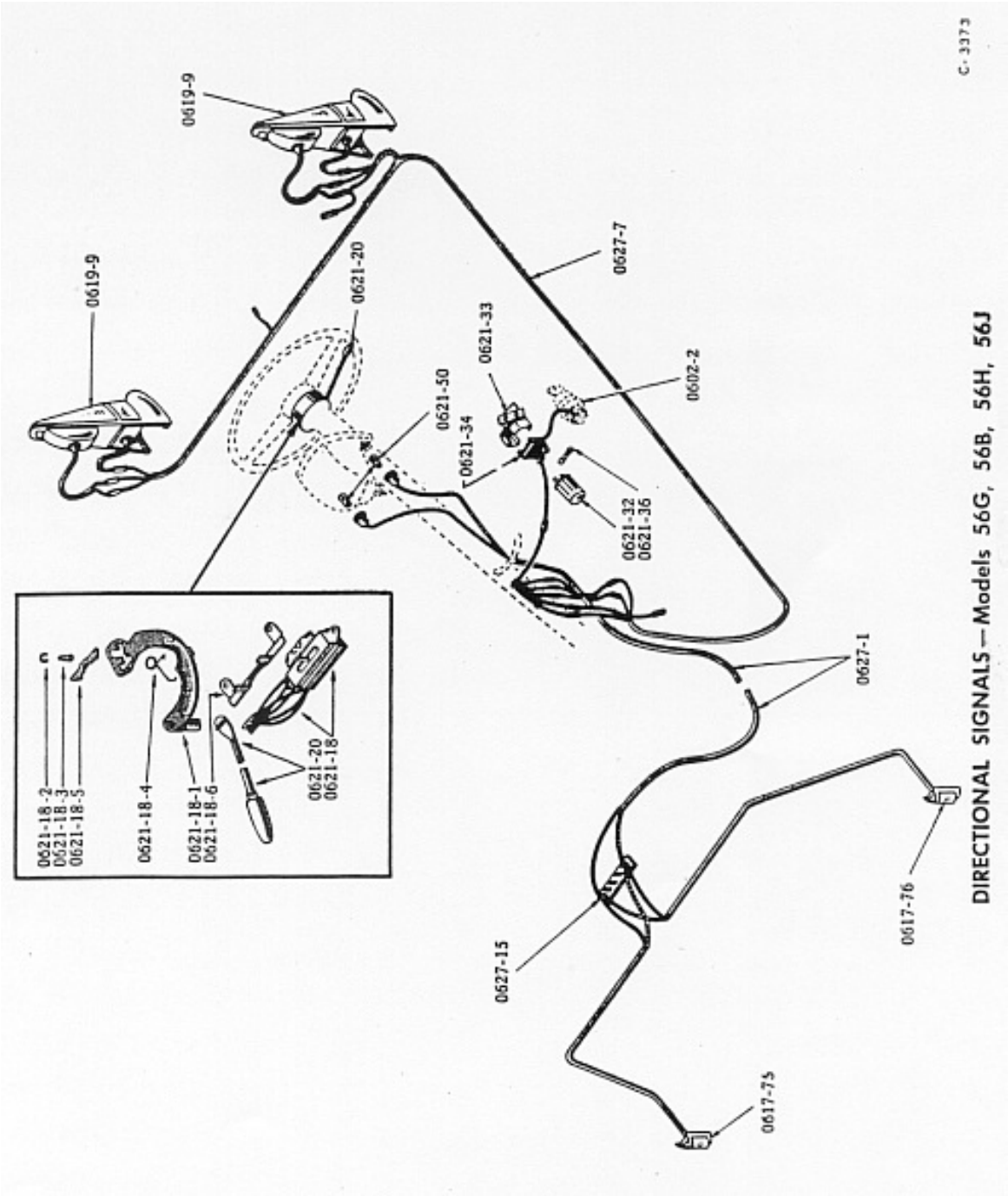

DIRECTIONAL SIGNALS—Models 56G, 56B, 56H, 56J

0601 - IGNITION DISTRIBUTOR, CONDENSER AND SPARK ADVANCE MODIFIER (Plates 06-3, 5)

Parts not listed may be ordered by description from the nearest Studebaker-Packard Corporation Parts Depot.

ILLUST. NUMBER	PART NUMBER	PER CAR	DESCRIPTION
0601-1	6480751	1	DISTRIBUTOR COMPLETE w/MODIFIER, ignition (use 6489834)
0601-1	6489834	1	DISTRIBUTOR COMPLETE w/MODIFIER, ignition
0601-2	440351	1	LOCK PLATE
	g175183	1	SCREW, to block 5/16" - 18 x 1-1/4"
	g120214	1	WASHER, lock 5/16"
	6484609	1	CAM and STOP PLATE KIT, distributor (for 6480751)
0601-3	440352	1	GASKET, dist.
0601-4	458576	1	STUD, dist. terminal
0601-4-1	458572	1	BUSHING, insulating
0601-5	458573	1	WASHER, inside, insulating
0601-6	458574	1	WASHER, outside, insulating
0601-7	458575	1	CLIP, terminal
	g120614	2	NUT, hex. No. 10 - 32
	g120217	2	WASHER, lock No. 10
0601-11	458563	1	CAP, distributor
0601-12-1	6484245	1	SPRING and SUPPORT, cap retaining and locating
0601-12-2	6484246	1	SPRING and SUPPORT, cap retaining and locating
0601-15	371245	1	ROTOR, distributor
0601-16	458361	1	POINT SET, dist. contact (consists of: contact arm and plate with points)
	458363	1	SCREW, contact arm spring No. 6 - 32 x 1/4"
	- - - -	1	WASHER, plain No. 6
	g131949	1	SCREW, to plate No. 8 - 32 x 3/16"
	g131015	1	WASHER, plain No. 8
0601-20	458362	1	CABLE, dist. contact arm
0601-24	458578	1	CONDENSER, distributor
	g131875	1	SCREW, to base plate No. 6 - 32 x 5/32"
	g131044	1	WASHER, lock No. 6
0601-25	6484251	1	BASE w/BUSHINGS, dist. timer (for 6480751 dist.)
0601-25	6484611	1	BASE w/BUSHINGS, dist. timer (for 6489834 dist.)
0601-25-1	188476	2	BUSHING, timer base
0601-26	458570	1	OILER, distributor
0601-26-1	458589	1	OIL WICK

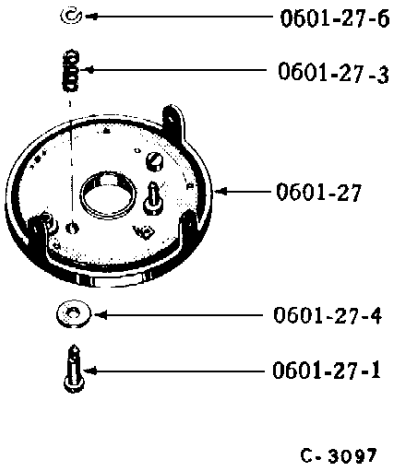

DISTRIBUTOR ADAPTER PLATE

ILLUST. NUMBER	PART NUMBER	PER CAR	DESCRIPTION
0601-27	458577	1	PLATE, dist. timer base
	g121841	1	WASHER, lock No. 8
0601-27-1	NOT 56J		
0601-27-3	NOT 56J		
0601-27-4	NOT 56J		
0601-27-6	NOT 56J		
0601-30	6484250	1	CAMSHAFT and CAM, dist. timer (for 6480751 dist.)
0601-30	6484247	1	CAMSHAFT and CAM, dist. timer (for 6499834 dist.)
0601-31	513666	1	LOCK RING
0601-31-1	905833	1	OIL WICK
0601-32	436577	1	SPACER, dist. timer camshaft
0601-33	458571	1	SHAFT less WEIGHTS, dist.
0601-35-1	527332	1	THRUST WASHER, upper, large, dist. shaft
0601-35-2	527337	1	THRUST WASHER, upper, small, dist. shaft
0601-36	177413	1	THRUST WASHER, lower, dist. shaft
0601-37	516196	2	WEIGHT, dist. timer
0601-38	6484248	1	SPRING SET, dist. timer weight (2 springs) (for 6480751 dist.)
0601-38	6484612	1	SPRING SET, dist. timer weight (2 springs) (for 6489834 dist.)
0601-39	516199	1	SPRING, distributor timer weight governor control
0601-44	458569	1	GEAR, distributor
0601-44-1	458560	1	RIVET, to shaft
0601-45	6484249	1	SPARK MODIFIER (for 6480751 dist.)
0601-45	474149	1	SPARK MODIFIER (for 6489834 dist.)
	- - - -	2	SCREW, to base No. 10 - 32 x 1/4"
	g138479	2	WASHER, shakeproof No. 10
0601-46	527330	1	LOCK RING, control arm to plate
	458566	1	WASHER, control arm to plate (felt)
	- - - - -	1	WASHER, plain No. 4
0601-49	6484252	1	SPRING, spark modifier (for 6480751 dist.)
0601-49	6484606	1	SPRING, spark modifier (for 6489834 dist.)
0601-50	527353x1	*	WASHER, calibrating .010
0601-50	527353x2	*	WASHER, calibrating .032

ILLUST. NUMBER	PART NUMBER	PER CAR	DESCRIPTION
0601-50	527353x3	*	WASHER, calibrating .065
0601-51	394024	1	FITTING, spark modifier suction
0601-52	527303	1	GASKET, composition
0601-67	6480513	1	PIPE w/NUTS, modifier
	g137396	*	NUT, pipe 3/16"
	465844	1	CLIP, pipe
	g137420	2	ELBOW, modifier pipe
	- - - -		TACHOMETER, DRIVE UNIT and CABLES - see Group 1720

0602 - IGNITION COIL, SWITCH AND LOCK Plate 06-3)

0602-1	6480147	1	COIL, ignition
	g120228	2	SCREW, fastening 5/16" - 18 x 5/8"
	g120393	2	WASHER, plain 5/16"
	g120214	2	WASHER, lock 5/16"
	g120614	2	NUT, terminal No. 10 - 32
	g106497	2	WASHER, lock No. 10
0602-2	536139	1	SWITCH less LOCK and KEYS, ignition and starting
	536126w	1	RETAINER or BEZEL, mounting
	536125	1	SPRING, tension (for 536126w retainer)
	537759	1	SPRING, anti-rattle
	g120614	4	NUT, terminal No. 10 - 32
	g138479	4	WASHER, sh'prf. No. 10
	532453	1	KIT, ignition and door lock - C-K (Hurd)
	532853	1	LOCK CYLINDER w/KEYS, ignition - C-K (Hurd)
0602-3	439961	1	RESISTOR, ignition coil primary
	g178745	1	SCREW, fastening 1/4" x 5/8"
0602-4	525931	2	KEY, ignition lock - C-K

0603 - SPARK PLUG AND DISTRIBUTOR CABLES

0603-1	6480978	8	SPARK PLUG, 14mm - Champion No. N18 - Illust. Plate 01-4
0603-1	472178	8	SPARK PLUG, 14mm - Champion No. N8B - Illust. Plate 01-4
	536599	8	GASKET, spark plug - steel
	s-19	*	CABLE, high tension (50 foot spool)
	s-20	*	CABLE, high tension (100 foot spool)
	6484554	1	CABLE SET, ignition consists of spark plug and distributor to coil high tension cables
	▲- - - -	8	CABLE, spark plug
	439632	1	CABLE, distributor to coil high tension
0603-4	440152	1	CABLE, distributor to coil low tension
	439831	1	BRACKET, right, front, spark plug cables (Used on model before car serial 6032307)
	439830	1	BRACKET, left front, spark plug cables (Used on model before car serial 6032307)
	440821	1	BRACKET, rear, spark plug cables (Used on model before car serial 6032307)
	6489377	1	BRACKET, right, spark plug cables (Used on and after car serial 6032307
	6489917	1	BRACKET, left, spark plug cables

ILLUST. NUMBER	PART NUMBER	PER CAR	DESCRIPTION
			(Used on and after car serial 6032307
	6489378	8	GROMMET, cables to bracket (for 6489377 & 6489917)
			(Used on and after car serial 6032307

0606 - STARTER MOTOR Plate 06-3)

0606-1	472231	1	STARTER MOTOR, assembly (incl. solenoid)
	g179859	2	SCREW, to clutch housing 7/16" - 14 x 1-1/8"
	g120383	2	WASHER, lock 7/16"
0606-5	6484181	1	ARMATURE, starter motor
0606-6	510774	*	THRUST WASHER, starter motor armature 1/32" thick
0606-6	190460	*	THRUST WASHER, starter motor armature 3/64" thick
0606-7	436125	1	SPACER, starter motor armature
0606-8	6484179	1	PLATE, starter motor commutator end
0606-9	458631	1	DOWEL, pin
0606-12-1	6484178	1	BRUSH SET, starter motor
	g121749	4	SCREW, to plate No. 8 - 32 x 5/16"
	g121841	4	WASHER, lock No. 8
0606-15	176203	4	SPRING, starter motor brush
0606-16	436123	2	BOLT, starter motor frame thru
	g120380	2	WASHER, lock 1/4"
0606-21	6484195	1	HOUSING w/BUSHING, Bendix drive
0606-22	458631	1	DOWEL, pin
0606-23	6484196	1	BUSHING, Bendix drive housing
0606-25	6484191	1	CLUTCH and DRIVE, starter
0606-27	6484193	1	STOP, starter clutch and drive
0606-28	6484194	1	RETAINER, stop
0606-29	6484187	1	LEVER, starter clutch and drive operating
0606-30	436129	1	PIN, to housing
	- - - -	1	COTTER, 3/32" x 1/2"
0606-47	6484180	1	THRUST WASHER, starter clutch and drive

0607 - STARTER SWITCH (Plate 06-3)

	- - - -	1	SWITCH, starter (See SWITCH, Ignition and Starting - Group 0602)
0607-5	6484212	1	SWITCH, starter (solenoid)
	g123197	4	NUT, terminal 5/16" - 18
	g120214	2	WASHER, lock 5/16"
	g120622	2	NUT, terminal No. 8 - 32
	- - - -	2	WASHER, lock No. 8
	- - - -	2	SCREW, to housing 1/4" - 20 x 3/8"
	g120380	2	WASHER, lock 1/4"
0607-12	6484185	1	BOOT, switch shift lever (Catalog shows 6484145)
0607-16	6484186	1	LINK and SCREW, switch lever to oper. lever
0607-20	6484192	1	PIN, to oper. lever
	g137130	1	COTTER, 1/16" x 3/8"

0608 - GENERATOR AND REGULATOR (Plate 06-11)

Generator (Standard)

0608-1	1540825	1	GENERATOR ASSEMBLY less PULLEY
	g120613	1	NUT, armature terminal 1/4" - 28
	g120614	1	NUT, field terminal No. 10 - 32
	g120380	1	WASHER, lock 1/4"

ILLUST. NUMBER	PART NUMBER	PER CAR	DESCRIPTION
	g127217	2	WASHER, lock No. 10
	g181614	2	BOLT, support 5/16"-24 x 1-1/2"
	g120368	*	NUT, hex. 5/16" - 24
	g120214	2	WASHER, lock 5/16"
0608-7-3B	440799	1	BRACKET, generator support
	512709	2	SCREW, fastening 5/16" - 18 x 3/4"
0608-8B	476040	1	ARM, generator adj.
	g180079	1	SCREW, to water pump 5/16" - 18 x 1"
	6403713	1	WASHER, plain (special)
	g120214	1	WASHER, lock 5/16"
	g180081	1	BOLT, to generator 5/16" - 18 x 1-1/4"
	g120376	1	NUT, hex. 5/16" - 18
	g120393	1	WASHER, plain 5/16"
	g120214	1	WASHER, lock 5/16"
0608-10	1540763	1	PULLEY, generator driving
0608-10-1	g124545	1	KEY, to armature shaft 1/8" x 5/8"
0608-11	639053	1	NUT, hex. (special)
	531074	1	WASHER, lock 23/32"
0608-12	1540762	1	ARMATURE, generator
0608-13	639055	1	SNAP RING
0608-14	1540757	1	PLATE and BRUSH HOLDER, commutator end
0608-15	- - - -	1	DOWEL, pin 1/8" x 7/16"
0608-16	1540764	1	PLATE, drive end (incl. bearing)
0608-17	- - - -	1	DOWEL, pin 1/8" x 7/16"
0608-18	1540761	1	OILER, commutator end plate
0608-18	2082x1	1	OILER, drive end plate
0608-19	176223	1	WASHER, drive end plate - felt
0608-20-2	527485	1	RETAINER, outer
0608-24	526868	1	BEARING, drive end plate
0608-25	1540766	1	RETAINER, to plate
0608-27	1540765	1	GASKET, retainer
	- - - -	3	SCREW, to plate No. 10 - 32 x 1/2"
	g106497	3	WASHER, lock No. 10
0608-29	183342	1	SLINGER, drive end plate
0608-35	1540756	1	BRUSH SET, generator
	- - - -	2	SCREW, to holder No. 8 - 32 x 1/4"
	- - - -	2	WASHER, lock No. 8
0608-36	1540754	2	ARM, generator brush
0608-37	1540755	2	SPRING, generator brush
0608-42	196296	2	BOLT, frame thru 1/4" - 20 x 7-7/16"
	g120380	2	WASHER, lock 1/4"
			Voltage Regulator
0608-45	1539451	1	VOLTAGE REGULATOR, generator
	1501x8	3	SCREW, to dash No. 14 x 7/8"
	g121753	2	WASHER, shakeproof 1/4"
	- - - -	3	SCREW, terminal No. 10 - 32 x 1/4"
	g106497	3	WASHER, lock No. 10

ILLUST. NUMBER	PART NUMBER	PER CAR	DESCRIPTION

0610 - STORAGE BATTERY (Plate 06-3)

Batteries are serviced at any Studebaker-Packard-Willard Battery Service Station.

0610-1	1546065	1	BATTERY, drained export - U.S.A.
	1312969p	1	BOX, battery - C-K
	g120376	*	NUT, weld bolt 5/16" - 18
	g120393	*	WASHER, plain 5/16"
	g120214	*	WASHER, lock 5/16"

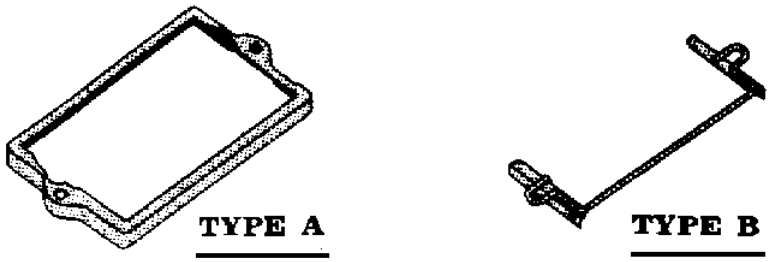

C-3612

BATTERY HOLD DOWN RIM

	1312971p	1	RIM, battery hold down	Type A
	1314745	2	BOLT, rim hold down	
	- - - -	2	WING NUT, bolt, 5/16" - 18	
	- - - -	2	WASHER, plain 5/16"	
	1312972p	1	BRACE, battery to apron C-K	
	1312973p	1	BRACE, battery to dash C-K	
	- - - -	2	BOLT, to apron 5/16" - 18 x 3/4"	
	g120376	2	NUT, hex. 5/16" - 18	
	g120393	2	WASHER, plain 5/16"	
	g120214	2	WASHER, lock 5/16"	

BATTERY CABLES - See Group 0630

AMMETER - See Group 1709

0615 - LIGHT SWITCHES - LIGHTING, INSTRUMENTS, FOOT DIMMER AND STOP LAMP (Plate 06-3)

0615-1	1540135	1	SWITCH, lighting - C-K
	536350w	1	NUT, to inst. board 9/16" - 28
0615-4 ?	1540136	1	SWITCH, instrument lamp *(No listing in manual for 0615-4)*
	536350w	1	NUT, to inst. board 9/16" - 28
0615-5	- - - -	1	CIRCUIT BREAKER, lighting switch - See Group 0627
0615-7	519246	1	SWITCH, head lamp, foot dimmer
	- - - -	3	SCREW, terminal No. 8 - 32 x ½"
	672811	3	WASHER, lock No. 8
	g120628	2	SCREW, to toe board 1/4" - 20 x 1/2"
	g120380	2	WASHER, lock 1/4"
0615-12	666858	1	SWITCH, stop lamp

ILLUST. NUMBER	PART NUMBER	PER CAR	DESCRIPTION

0617 - HEAD AND PARKING LAMPS (Plates 06-3, 15)

Head Lamp
Head Lamps are furnished complete less rims.

0617-1	1314758	2	HEAD LAMP - LHC U.S.A.
0617-1	1314759	2	HEAD LAMP - RHC U.S.A.
	g161895	8	SCREW, to fender No. 10 x 1/2" (Single unit head lamps std.)
0617-2	285968	2	WEATHERSTRIP, lamp to fender - rubber
0617-5	NOT 56J		
0617-9	NOT 56J		
0617-10	NOT 56J		
0617-8A	1312088w	2	RIM, head lamp - chrome C-K (Single unit head lamps std.)
	1523x18	2	SCREW, to body No. 8 - 32 x 1-1/8"
	1622x2	*	SPEED NUT, screw
0617-15	1314960p	2	BODY, head lamp - U.S.A.
0617-26	g456796	2	SEALED BEAM UNIT, head lamp - LHC
0617-27	310795	2	BASE, sealed beam mounting - U.S.A.
0617-28	285192	4	SPRING, retainer U.S.A.
0617-28-1	291874	4	PIN, spring retaining U.S.A.
0617-29	285976	2	RING and LUGS, sealed beam retaining - U.S.A.
	292261	6	SCREW, to base - U.S.A. No. 8 - 32 x 5/16"
0617-58	285974	4	SCREW, head lamp focusing - U.S.A.
0617-61	276526	4	NUT, special (steel) Two types of nuts were used - steel and nylon - check before ordering.
0617-61	311471	4	NUT, special (nylon) Two types of nuts were used - steel and nylon - check before ordering.
0617-62	1314757	2	CABLE, head lamp - U.S.A.
0617-63	287401	4	TERMINAL, junction block end - U.S.A.
0617-64	273846	2	SOCKET, bulb end - U.S.A.
	526600x4	2	CLIP, head lamp cables - lacer type
	532855	2	GROMMET, cables to apron - C-K
0617-67	1314962	2	CABLE, head lamp ground
	296979	2	TERMINAL, eyelet
	- - - -	2	LAMP COMPLETE, parking and signal - C-K (See LAMP, fender parking and signal - Group 0618)
0617-75	(Not 56J See group 0618)		
0617-76	(Not 56J See group 0618)		

0618 - FENDER PARKING LAMP (Plate 06-18)

(The 56J was not listed with the 56G, 56B, and 56H in the Studebaker Parts catalog, but the parking lights are the same.)

0618-1	1312864	2	LAMP, fender parking and signal - C-K
	1959x2	4	STUD, to fender
	3001x1	4	PAL NUT, stud
0618-7	1314875	2	BODY and BASE, parking and signal lamp - C-K
0618-10	NOT 56J		
0618-12	g454645	2	BULB, parking and signal lamp - C-K
0618-15	1312867	2	LENS, parking and signal lamp - C-K
	1529x19	2	SCREW, to lamp
0618-21	1312868	2	GASKET, parking and signal lamp lens - C-K
0618-27	1312869	2	SOCKET and CABLES, parking and signal lamp - C-K
	- - - -	4	SCREW and WASHER, to body No. 4 - 40 x 3/8"

ILLUST. NUMBER	PART NUMBER	PER CAR	DESCRIPTION
	1312544	2	GROMMET, parking and signal lamp cable -C-K

0619 - TAIL AND STOP LAMP (Plates 06-3, 19)

0619-9-1	1314382	1	BODY, right, tail lamp - K Incl. socket cable, gasket and bulb
0619-9-2	1314383	1	BODY, left, tail lamp - K Incl. socket cable, gasket and bulb
	- - - -	4	SCREW, to fender 1/4" - 14 x 1-3/4" - C-K-D
0619-10	1783x2	*	SPEED NUT, No. 14
0619-15	g454645	2	BULB, tail, stop and signal lamp
0619-18	1312694	2	LENS, tail lamp - C-K
	- - - -	4	SCREW, lens No. 8 - 32 x 5/8" - C-K
0619-22	308957	2	GASKET, tail lamp lens - C-K

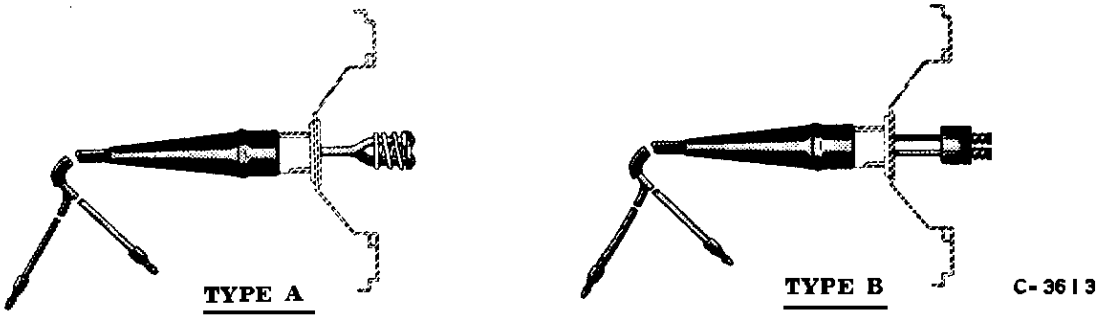

TAIL LAMP SOCKET AND CABLES

0619-32	1312380	2	SOCKET and CABLES, tail lamp
0619-32-1	309173	2	CABLES, tail lamp - C-K (Incl. insulator and terminals)
0619-33	198667	4	TERMINAL, push type
0619-34	311029	2	GROMMET, sock and cables to fender - C-K

0620 - LICENSE PLATE LAMP (Type A) (Plate 06-3)

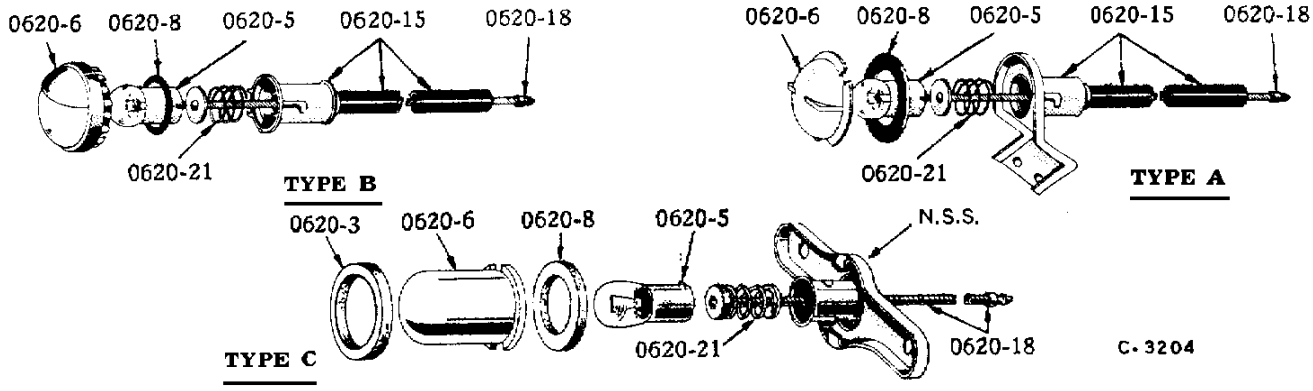

ILLUST. NUMBER	PART NUMBER	PER CAR	DESCRIPTION
			LICENSE PLATE LAMP
0620-1	1539168	1	LAMP less BULB, license plate - C-K (Type A)
			(Incl. lens, socket and loom & cable w/terminals)
	1161x19	2	SCREW, mounting No. 10 - 24 x 1/2"
	g106497	2	WASHER, lock No. 10
0620-5	g142450	1	BULB, license lamp - except D-P
0620-6	536458	1	LENS, license lamp - C-K
0620-8	536459	1	GASKET, license lamp lens - rubber - C-K
0620-15	536457	1	SOCKET w/BRACKET and LOOM, license lamp bulb - C-K
0620-18	1540658	1	CABLE, license lamp - C-K
	198667	*	TERMINAL, push type
0620-21	291222	1	SPRING, socket coil (for 1540658)
	- - - -	*	CONNECTOR, license lamp cable to tail and stop lamb cables
			(see tail and stop lamp cables connector - Group 0627)
0621 - DIRECTIONAL LAMPS			**(Plate 06-25)**
	AC-2806	1	SIGNAL LIGHTS KIT, directional
	- - - -	2	LAMP, front, signal - C-K
			see Fender Parking Lamp Group 0618
	- - - -	2	LAMP, rear, signal - see Tail Lamp - Group 0619
0621-18	533519	1	SWITCH and CABLES, signal lights - except AD.
0621-18	1539781	1	SWITCH and CABLES, signal lights - w/AD.
	526600x2	1	CLIP, cables to inst. board - lacer type
	- - - -	2	SCREW, to bracket No. 10 x 3/8"
0621-18-1	533520	1	PLATE, signal lights switch (4HD-A stamped on switch plate
			and lever signifies factory installed signal lights.
0621-18-2	533523	1	RETAINER, to switch
0621-18-3	533522	1	SPRING, coil tension
0621-18-4	533583	1	SPRING, signal switch plate tension - flat
			(4HD-A stamped on switch plate and lever signifies
			factory installed signal lights.)
0621-18-5	533699	1	PAWL, signal switch plate
			(4HD-A stamped on switch plate and lever signifies
			factory installed signal lights.)
0621-18-6	533698	1	BRACKET, switch plate pawl
			(4HD-A stamped on switch plate and lever signifies
			factory installed signal lights.)
0621-20	1540189	1	LEVER, signal switch oper. - LHC (painted)
0621-20	1540683	1	LEVER, signal switch oper. - LHC (chrome)
	- - - -	1	SCREW and WASHER, to switch No. 10 - 32 x 1-1/2"
0621-32	1540311	1	FLASHER, signal lights
0621-33	(except C-K)		
0621-34	1540306	1	CABLE w/FUSE and FLASHER BLOCK, signal lights to ignition
			switch
0621-36	195792	1	FUSE, signal lights - 14 amp.
0621-45	533697	1	CAM, steering wheel directional signal
			(illust. plate 13-4)
	- - - -	2	BULB, front signal lights - see bulb, parking and signal
			lamp Group 0617, 0618)
	- - - -	2	BULB, rear signal lights - see bulb, tail, stop and signal
			lamp - Group 0619
0621-50	g131282	2	BULB, signal lights tell-tale
	- - - -	2	SOCKET and CABLES, front signal lamp - see socket and
			cables, parking and signal lamp - Group 0617, 0618

ILLUST. NUMBER	PART NUMBER	PER CAR	DESCRIPTION

0622 - LICENSE PLATE BRACKETS (Plate 18-2)

	AC-2495	1	LICENSE PLATE FRAME KIT
	- - - -	1	BRACKET, rear license supt. (part of rear bumper outer face bar Group 1805)
0622-11	520285	2	BUMPER, rear license - rubber C-K-D
0622-15	532164p	1	BRACKET, front license supt. (illust. plate 18-2)
	- - - -	2	BOLT, to bumper 7/16" - 14 x 1-3/4"
	g272599	2	NUT, hex. 7/16" - 14
	41x359	2	WASHER, spacing 7/16" - U.S.A.
	g120628	4	BOLT, license plate 1/4" - 20 x 1/2"
	1578x24	2	SPEED NUT, rear plate 1/4" - 20
	- - - -	2	PAL NUT, front plate 1/4" - 20
	g120392	2	WASHER, plain 1/4"

0625 - HORN (Plate 06-3)

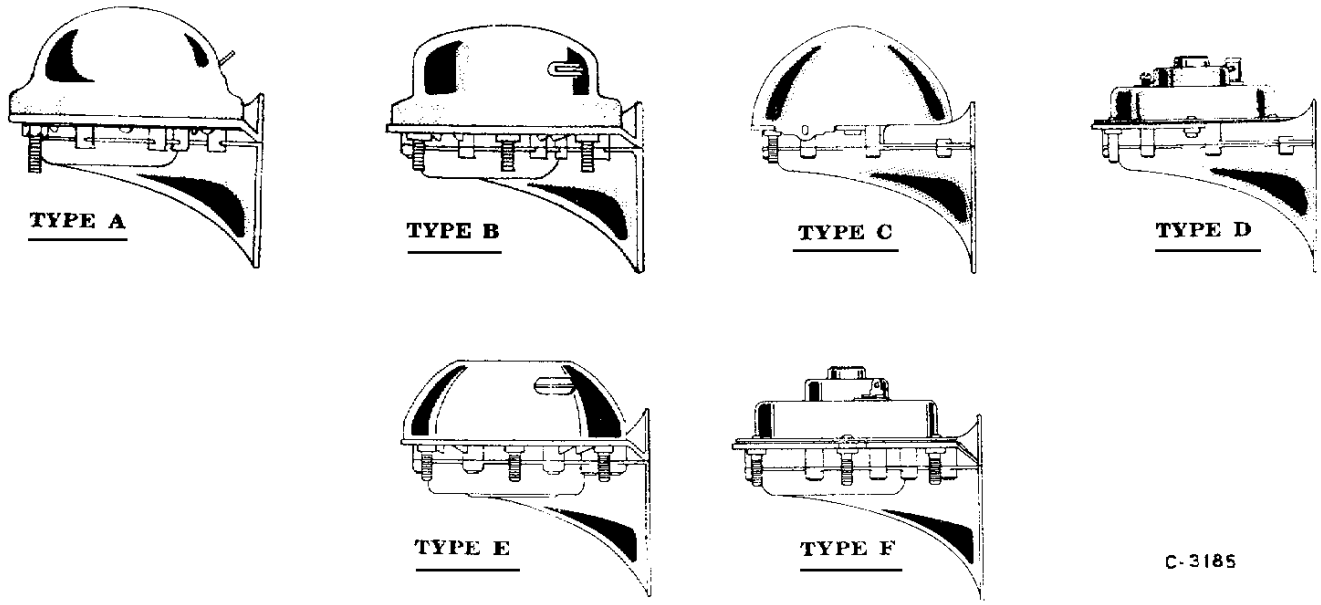

HORN

0625	1540085	1	HORN (Sparton low tone)	USA	Type B (less cable)
0625	1540087	1	HORN (Sparton high tone)	USA	Type B (less cable)
0625	1540157	1	HORN (Delco high tone)	USA	Type C (less cable)
0625	1540158	1	HORN (Delco low tone)	USA	Type C (less cable)
	- - - -	2	SCREW, terminal No. 8 - 32 x 1/4" Sparton horns		
	683870	2	WASHER, lock (special) Sparton horns		
	- - - -	2	SCREW, terminal No. 8 - 32 x 5/16" Delco horns		
	679955	2	WASHER, lock (special) Delco horns		
	g120367	4	NUT, to bracket 1/4" - 28		
	g120380	4	WASHER, sh'prf. 1/4"		

ILLUST. NUMBER	PART NUMBER	PER CAR	DESCRIPTION

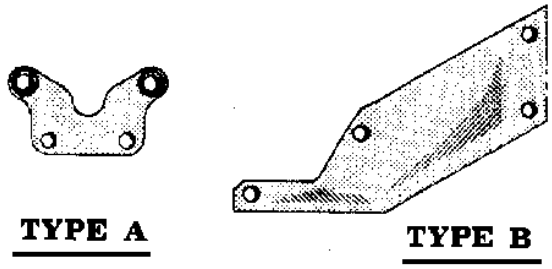

HORN BRACKET

	530262	2	BRACKET, horn (for Delco horn) Type A
	536734	2	BRACKET, horn (for Sparton horn) Type A
	g180022	4	BOLT, to deflector 1/4" - 20 x 1"
	g120375	4	NUT, hex. 1/4" - 20
	g121753	8	WASHER, sh'prf. 1/4"
	666768	4	PLATE, mounting
	532990	2	SPACER
0625-3	1540153	1	CABLE, right, horn to relay - C-K
0625-3	1540152	1	CABLE, left, horn to relay - C-K
	1897x1	2	CLIP, horn cables to deflector
0625-5	1539596	1	RELAY, horn
	g177999	2	SCREW, fastening No. 14 x 1/2" - U.S.A.
	g121749	3	SCREW, terminal No. 8 - 32 x 1/2"
	679832	3	WASHER, lock No. 8

0627 - CHASSIS WIRING, JUNCTION BLOCK, CIRCUIT BREAKER (Plate 06-3)

0627-1	1540232	1	HARNESS, chassis wiring - LHC
			(Harness has integral wires to starter solenoid switch, used before car serial 6031808 and used on 6031834 & 6031840)
0627-1	1540839	1	HARNESS, chassis wiring - LHC
			(Harness has separate cables to starter solenoid switch, used on/after car serial 6031808 except 6031834 & 6031840)
0627-7	1540181	1	HARNESS, tail lamp cables - LHC
0627-12	192545	1	CONNECTOR, cables (2 wire)
	198667	*	TERMINAL, push type
	1685390	*	TERMINAL, spade (90°)
	533314	*	TERMINAL, spade (straight)
	533098	1	CLIP, to dash - K
	536795	*	CLIP, to dash
	182050	1	CLIP, to fender apron 1/2" - except C-K (???) Clamp
	g177999	*	SCREW, No. 14 x 1/2"
	g133049	*	BOLT, to floor pan 1/4" - 20 x 1"
	g120375	*	NUT, hex. 1/4" - 20
	g120380	*	WASHER, lock 1/4"
0627-13	192545	*	CONNECTOR, tail and stop lamp cables (2 wire)
	1540563	1	CONNECTOR, stop lamp cables (3 wire)
	514466	2	CONNECTOR, stop lamp switch terminal
	192545	1	CONNECTOR, license lamp cable - except D
	198667	*	TERMINAL, push type
	536795	*	CLIP, to rear crossmember and frame
	- - - -	*	CLIP, to frame (see Group 1107)

ILLUST. NUMBER	PART NUMBER	PER CAR	DESCRIPTION
0627-14	198061	1	JUNCTION BLOCK, starter cables
			(Harness has separate cables to starter solenoid switch, used on/after car serial 6031808 except 6031834 & 6031840)
	g177999	2	SCREW, fastening 1/4" x 1/2" (14 x 1/2"?)
	g120614	3	NUT, terminal hex. No. 10 - 32
	g138479	3	WASHER, sh'prf. No. 10
0627-15	519186	1	JUNCTION BLOCK, head lamp cables
	g177999	2	SCREW, to apron No. 14 x 1/2"
	g120614	5	NUT, terminal No. 10 - 32
	g138479	5	WASHER, sh'prf. No 10
0627-16	1540287	1	CIRCUIT BREAKER, lighting switch
0627-16	1540270	1	CIRCUIT BREAKER, auxiliary lighting
	g120614	4	NUT, terminal No. 10 - 32
	g138479	4	WASHER, sh'prf. No. 10
	532760	1	BRACKET, auxiliary lighting circuit breaker - C-K
	g155103	2	BOLT, to dash No. 10 - 24 x 3/8"
	g120361	2	NUT, hex. No. 10 - 24 (for 532760)
	g138479	2	WASHER, lock No. 10 (for 532760)
	1540293	1	INSULATOR, circuit breaker - fish paper - C-K
	532759	1	CONNECTOR, circuit breaker - C-K
	g120614	1	NUT, to circuit breaker No. 10 - 32
	g106497	1	WASHER, lock No. 10
	1540836	1	GROMMET, chassis cables - dash - rubber
0627-20	1540563	1	CABLE, stop lamp cable to switch leads (less directional signals)
0627-26	1540837	1	CABLES, wiring harness to starter solenoid
			(Harness has separate cables to starter solenoid switch, used on/after car serial 6031808 except 6031834 & 6031840)

0630 - BATTERY AND STARTING CABLES AND GROUND STRAPS (Plate 06-3)

0630-1	1540076	1	CABLE, battery to starter switch
0630-5	1540067	1	CABLE, battery ground - 22" long - C-K

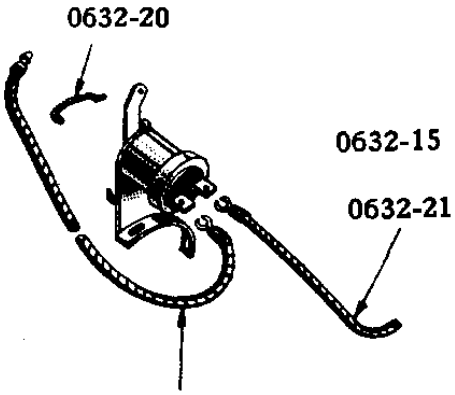

BACK-UP LAMP SWITCH

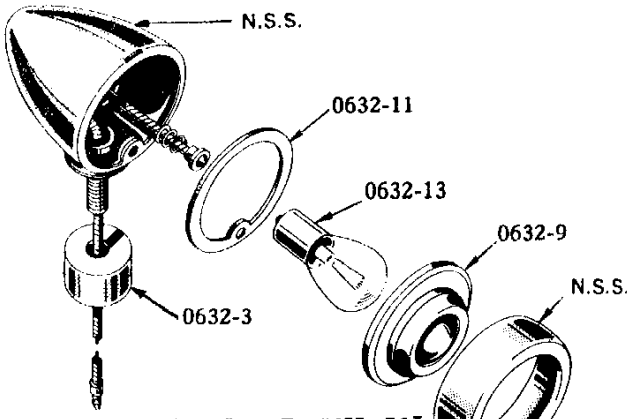

MODELS 56G, 56B, 56H, 56J
BODY SYMBOLS C-K-D
MODELS 58G-B-H
BODY SYMBOLS W1-Y1-F1-D1

ILLUST. NUMBER	PART NUMBER	PER CAR	DESCRIPTION
0632 - BACK-UP LAMP		**(Plate 06-26)**	
	AC-2762	1	BACK-UP LAMP KIT - C-K-D (less switch)
	AC-2334	1	SWITCH KIT, back-up lamp - LHC - (with ST. and OD.) (less power steer.)
	AC-2444	1	SWITCH KIT, back-up lamp - LHC - (with ST. and OD.) (with power steer.)
	1540327	2	LAMP, back-up - C-K-D
0632-1	g124920	2	NUT, to body 5/16" - 24 (for 1540327)
	g173127	2	WASHER, sh'prf. 5/16" (for 1540327)
	1529x21	2	SCREW, to housing - C-K
0632-3	1540328	2	SPACER, back-up lamp mounting (56J not shown)
0632-9	1541582	2	LENS, back-up lamp - C-K-D
0632-11	1541584	2	GASKET, back-up lamp lens - C-K-D
0632-13	g454646	2	BULB, back-up lamp
0632-15	533460	1	SWITCH, back-up lamp (less power steer.) LHC with ST. & OD.
0632-15	534389	1	SWITCH, back-up lamp (with power steer.) LHC with ST. & OD.
(0853-1)	- - - -	1	SWITCH, back-up lamp (with (AD) see Starter Cut-Out Switch - Group 0853
	1501x21	2	SCREW, to steer. post jacket - LHC
0632-20	533565	1	ROD, back-up lamp switch oper. (less power steer.) LHC
0632-20	534397	1	ROD, back-up lamp switch oper. (with power steer.) LHC
	- - - -	1	COTTER, 1/16" x 1/2"
0632-21	1540561	1	CABLE, switch to lamp connector - LHC
0632-25	NOT 56J		
0632-30	198667	*	TERMINAL, push type
	g200006	2	TERMINAL, eyelet

0633 - SPOTLIGHT (Plate 06-33)

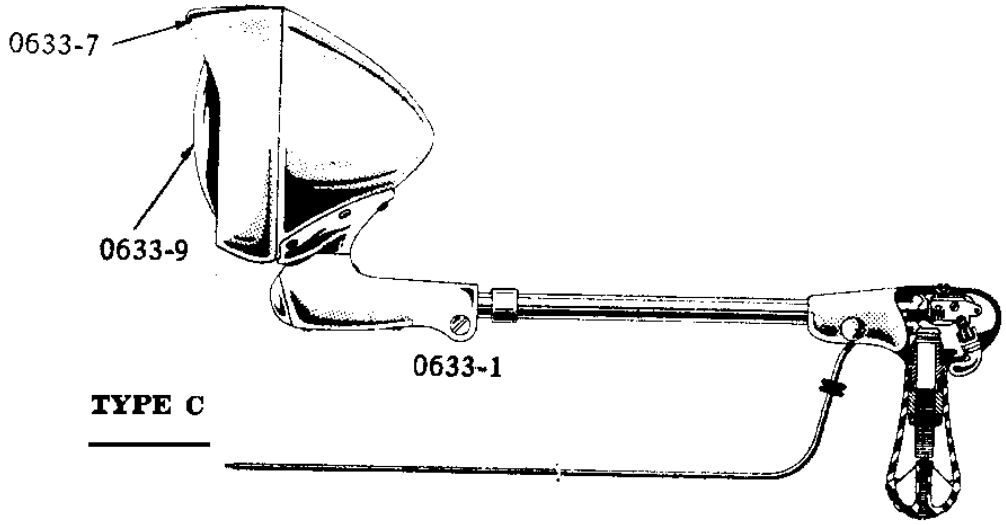

ILLUST. NUMBER	PART NUMBER	PER CAR	DESCRIPTION	Type
0633-1	AC-2766	1	SPOTLIGHT ASSEMBLY, right C-K (Incl. fastening parts)	C
0633-1	AC-2765	1	SPOTLIGHT ASSEMBLY, left C-K	C
	1540748	1	BRACKET, right outside mounting C-K (incl. screw)	
	1540749	1	BRACKET, left outside mounting C-K (incl. screw)	
	1540747	*	GASKET, outside mounting bracket - C-K	
	1540750	*	BRACKET, inside mounting	
0633-7	1541631	*	RIM, spotlight	
0633-9	1540723	*	SEALED BEAM UNIT, spotlight	
	1540841	1	SWITCH and CABLE, spotlight	
	g134211	1	SCREW, fastening No. 8 - 32 x 5/16"	
	1540842	1	LEVER, switch operating	
	1540843	1	SCREW, fastening	
	1540844	1	HANDLE, spotlight	
	1540845	1	KNOB, spotlight handle	
	g134248	1	SCREW, fastening No. 8 - 32 x 1-1/2"	
	1540847	1	SHAFT and PINION, spotlight handle	
	1540846	1	GEAR, spotlight operating	

* - Use as required
▲ - Not available

TRANSMISSION (Trans. Model T85)

From page 237 - Chassis Parts Manual

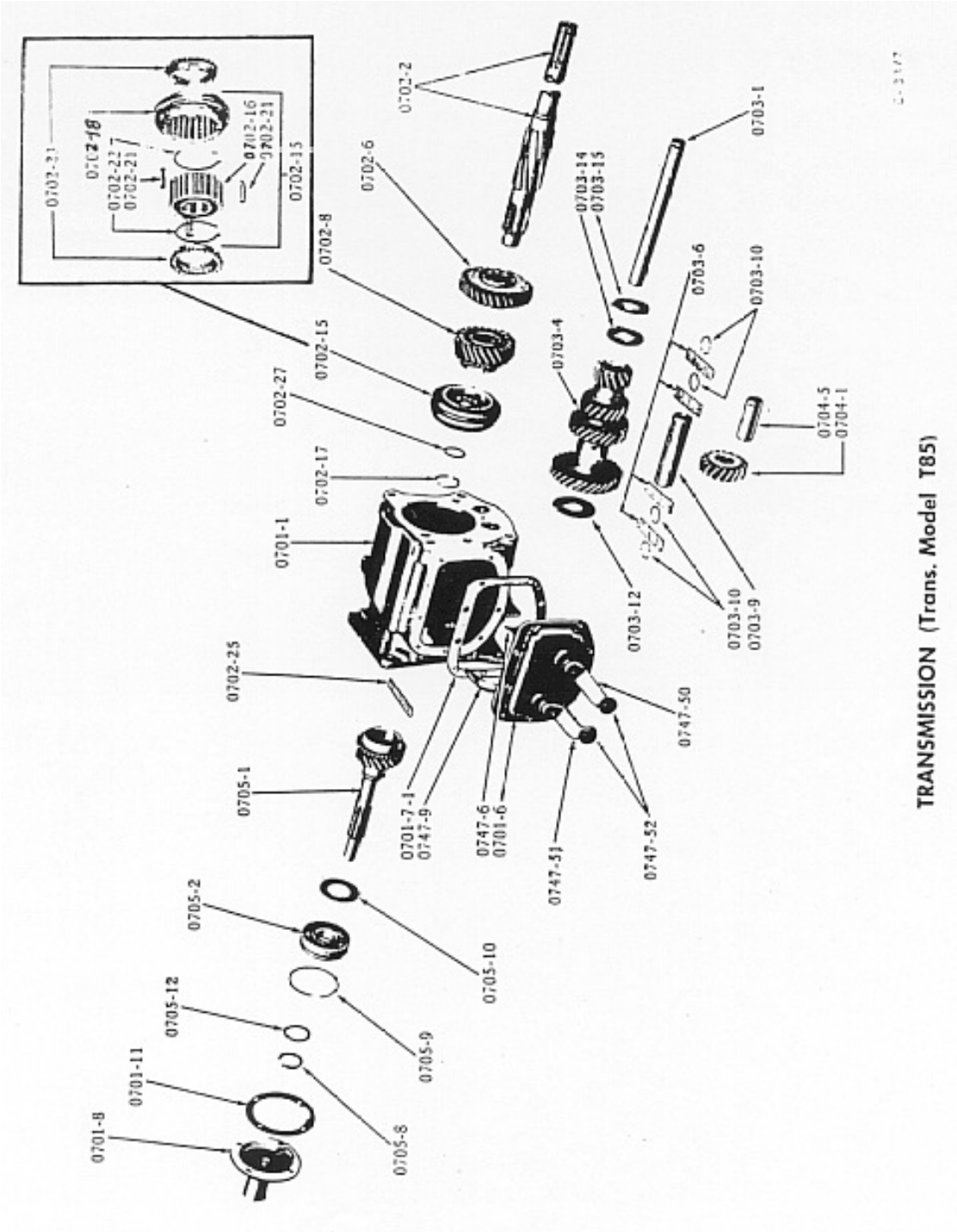

TRANSMISSION (Trans. Model T85)

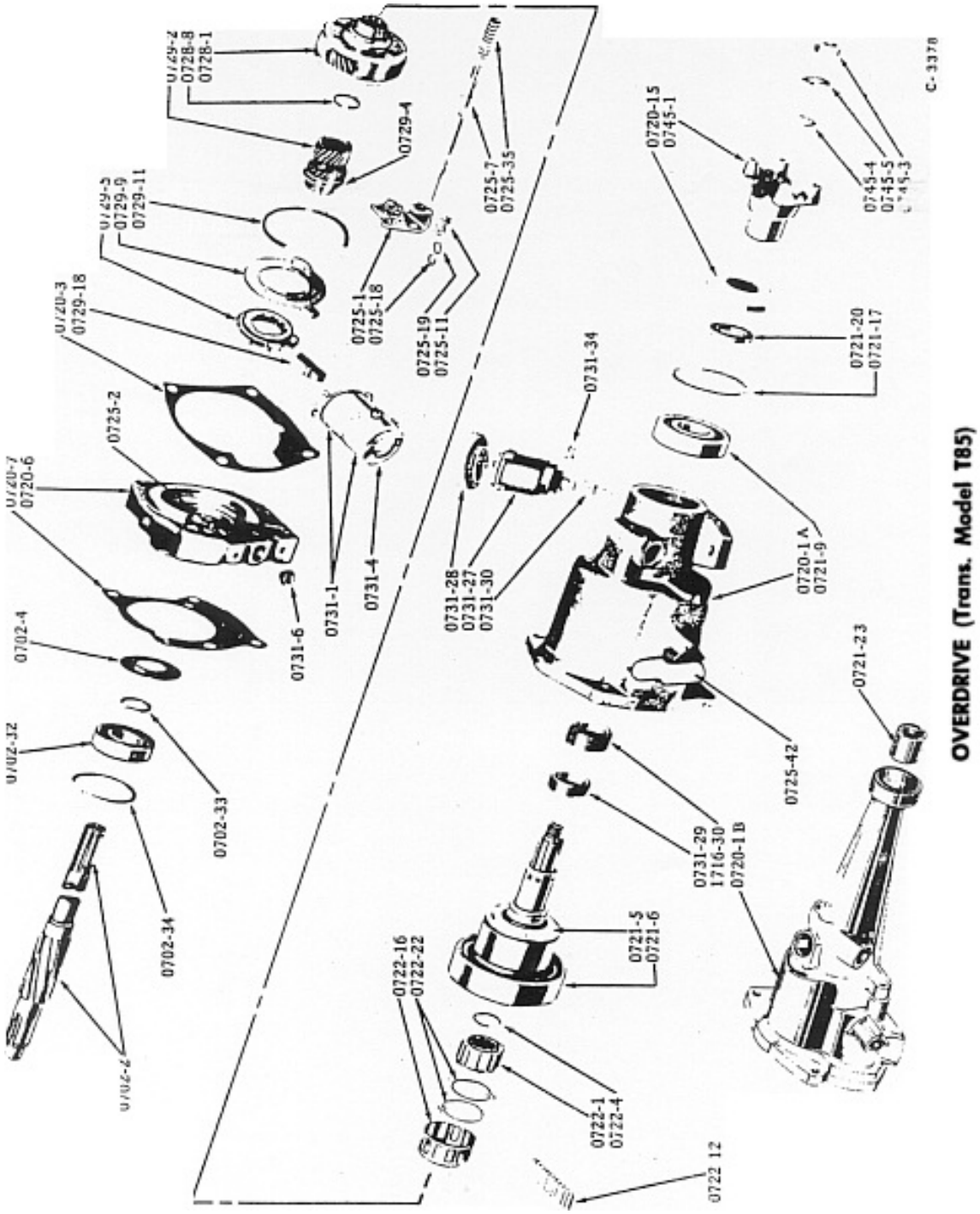
0729-2
0728-8
0728-1
0729-4
0729-5
0729-9
0729-11
0720-3
0729-18
0725-2
0720-7
0720-6
0702-4
0702-32
0702-33
0702-34
0702-2
0725-1
0725-18
0725-19
0725-11
0725-7
0725-35
0731-1
0731-4
0731-6
0731-28
0731-27
0731-30
0731-34
0720-15
0745-1
0745-4
0745-5
0745-3
0721-20
0721-17
0720-1 A
0721-9
0721-23
0725-42
0731-29
1716-30
0720-1 B
0721-5
0721-6
0722-16
0722-22
0722-1
0722-4
0722 12
C-3378
OVERDRIVE (Trans. Model T85)

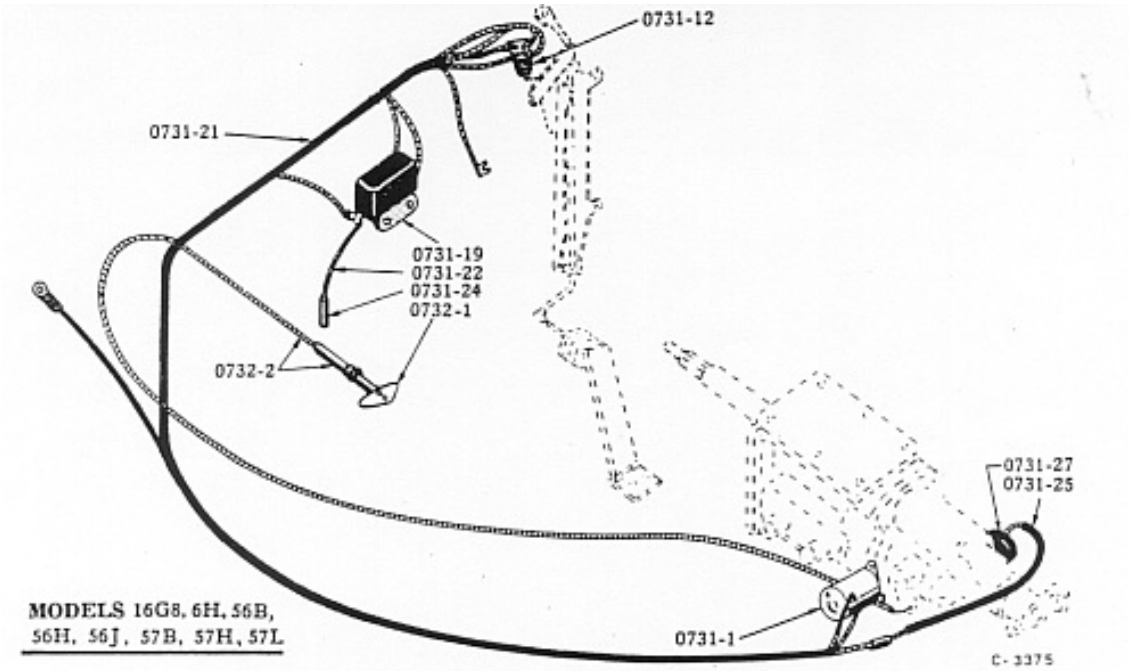

OVERDRIVE CUT-OUT CONTROLS
(LESS LOCKOUT SWITCH)

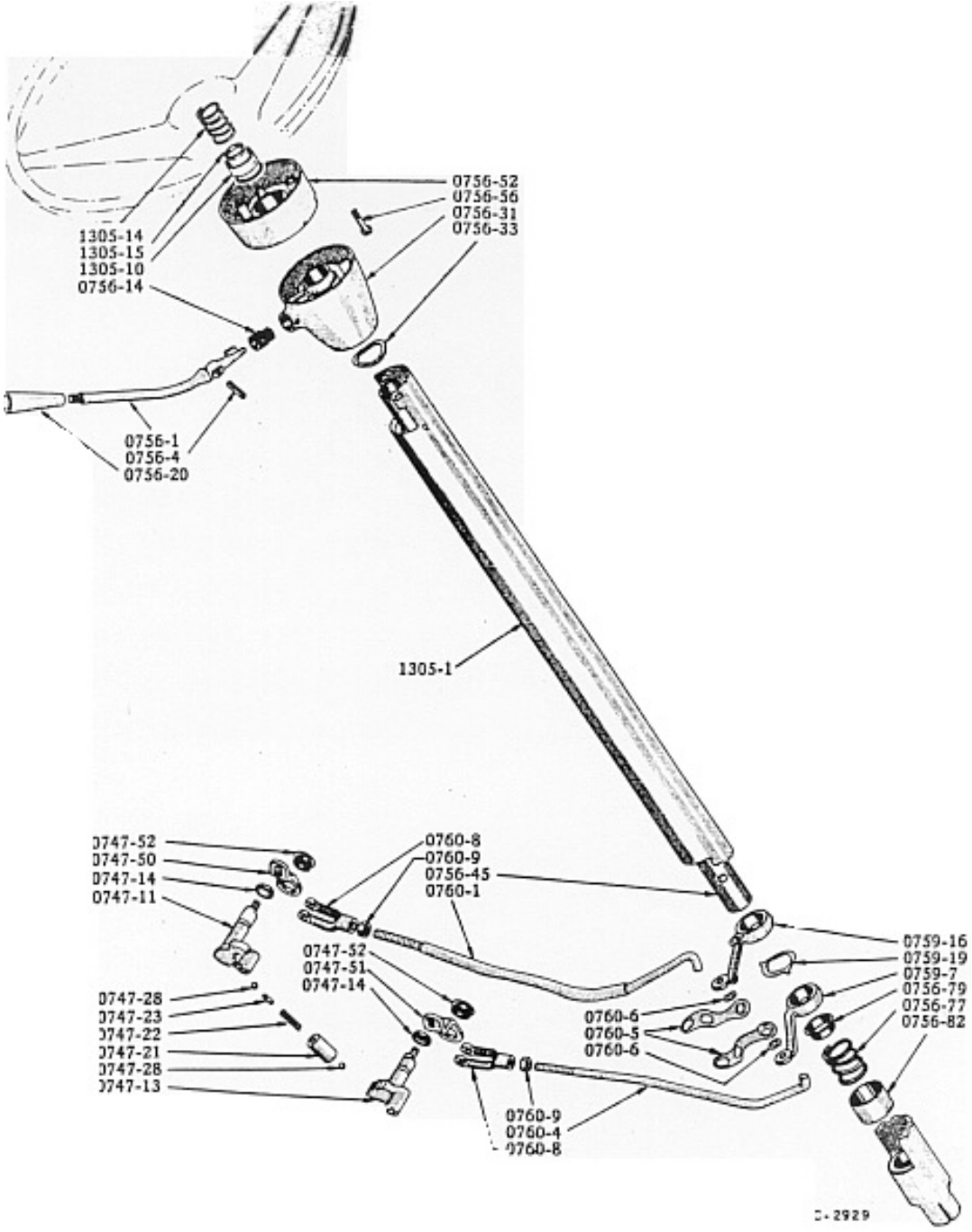

STEERING POST GEARSHIFT

ILLUST. NUMBER	PART NUMBER	PER CAR	DESCRIPTION

To insure the proper servicing of transmission assemblies a transmission serial number is stamped on the case. This serial number will be used to record any changes affecting the interchangeability of the component parts.

The serial number is decoded as indicated on sketch. Letters signifying month: Run in sequence from A (January) to M (December) the letter I being omitted. Factory shift has no significance.

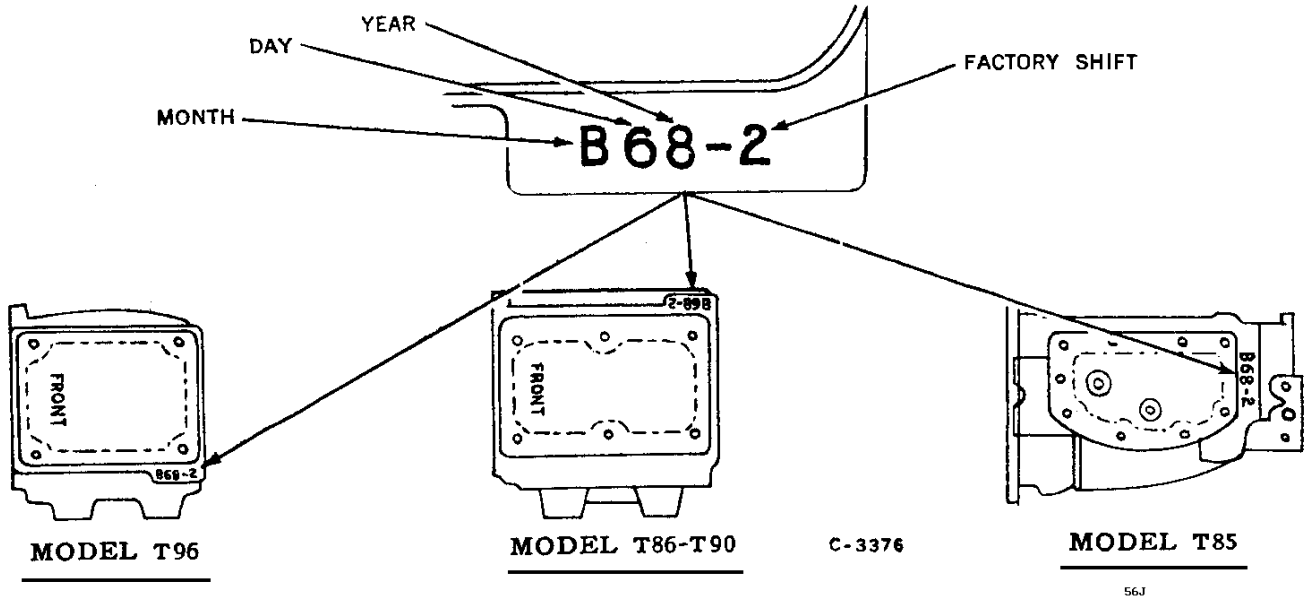

TRANSMISSION CASE IDENTIFICATION PLATE

0700 - TRANSMISSION ASSEMBLY (Plates 07-3, 4)

Model T85 - Overdrive Used on:
all Model 56B police cars
all Model 56H - Y - LHC
all Model 56J
all Model 57H, K7 - heavy duty, police cars and taxi cabs
all Model 57L - LHC
all Model 58H - K7
all Model 58L - K9

1539729	1	TRANSMISSION ASSY. (w/OD.)
g179862	4	SCREW, to clutch housing 7/16" - 14 x 1-1/2"
g120383	4	WASHER, lock 7/16"

This transmission is less the following parts:

1 - Solenoid	1 - Sleeve, gov. pinion
1 - Governor	1 - Lever, OD. shift rail
1 - Boot, governor	2 - Lever, trans. shift
1 - Pinion, governor	2 - Insulator, shift lever
1 - Snap ring, gov. pinion	1 - switch, lockout
1 - Gasket, lockout switch	

-- Used on cars having overdrive transmission with lockout switch.

ILLUST. NUMBER	PART NUMBER	PER CAR	DESCRIPTION		
0701 - TRANSMISSION CASE (Plate 07-3)					
0701-1	1541662	1	CASE w/PLUGS, trans. (w/OD.)		
	681705	1	BREATHER, trans. case		
	g103880	2	PLUG, filler or drain 1/2"		
0701-6	1540815	1	HOUSING, gear shift control		
	g179817	9	SCREW, to case 5/16" - 18 x 7/8"		
	g120214	8	WASHER, lock 5/16"		
	g114605	1	WASHER, sh'prf. 5/16"		
0701-7-1	458438	1	GASKET, gearshift control housing (Incl. in gasket set 1540822)		
0701-8	458465	1	FLANGE, trans. case front		
0701-9	176404	4	SCREW, to case		
	g138485	*	WASHER, sh'prf. 5/16"		
				Incl. in gasket set	**Thick**
0701-11	458466	#	GASKET, front flange - paper	1540822	.010
0701-11	458467	#	GASKET, front flange - paper		.015
0701-11	458468	#	GASKET, front flange - paper	1540822	.020
0701-11	458469	#	GASKET, front flange - paper		.025
0701-24	1540822	1	GASKET SET, transmission - consists of the following gaskets: 1 - 458438 Housing, control 1 - 458468 Flange, front 1 - 458466 Flange, front 1 - 458488 Housing, OD. 1 - 458479 Adapter		
0702 - TRANSMISSION MAIN SHAFT, GEARS AND BEARINGS (Plates 07-3, 4)					
	458440	1	SHAFT and GEARS, main (w/OD.) consists of: 1 - 458441 Shaft 1 - 458450 Gear 1 - 458442 Synchronizer 2 - 458449 Ring 1 - 1540812 Gear 1 - 371860 Snap ring		
0702-2	458441	1	SHAFT, main (w/OD.)		
0702-4	458486	1	BAFFLE, main shaft oil w/OD.		
0702-6	458450	1	GEAR, low and reverse sliding		
0702-8	1540812	1	GEAR and BUSHING, second speed		
0702-15	458442	1	SYNCHRONIZER, COMPLETE second and high - consists of: 1 - ---- Gear 3 - 458445 Plate 1 - ---- Sleeve 2 - 681642 Snap ring		
0702-16	▲- - - -	1	GEAR, second and high (use 458442) - Not available		
0702-17	371860	1	SNAP RING		
0702-18	▲- - - -	1	SLEEVE, second and high synchronizer (use 458442)		
0702-21	458445	3	PLATE, second and high synchronizer shifter		
0702-22	681642	2	SNAP RING		
0702-23	458449	2	BLOCKING RING, second and high synchronizer		
0702-25	458452	14	ROLLER, main shaft front bearing		
0702-27	458451	1	SPACER, main shaft front bearing		
					Thick
0702-32	122825	1	BEARING, main shaft rear		
0702-33	371860	#	SNAP RING, small (located in shaft)		.087
0702-33	371861	#	SNAP RING, small (located in shaft)		.090
0702-33	371862	#	SNAP RING, small (located in shaft)		.093
0702-33	371863	#	SNAP RING, small (located in shaft)		.096
0702-34	458481	#	SNAP RING, large (located in adapter plate)		.088
0702-34	458482	#	SNAP RING, large (located in adapter plate)		.091
0702-34	458483	#	SNAP RING, large (located in adapter plate)		.094
0702-34	458484	#	SNAP RING, large (located in adapter plate)		.097
0702-34	458485	#	SNAP RING, large (located in adapter plate)		.100

ILLUST. NUMBER	PART NUMBER	PER CAR	DESCRIPTION	
0703 - TRANSMISSION COUNTERSHAFT, GEARS AND BEARINGS (Plate 07-3)				
0703-1	458462	1	COUNTERSHAFT	
	g103905	1	KEY, woodruff 1/8" x 5/8"	
0703-4	458455	1	GEAR CLUSTER, countershaft	
0703-6	458461	80	ROLLER, gear cluster bearing	
0703-9	1540823	1	SPACER and WASHER KIT, gear cluster bearing rollers	
0703-10	458457	4	WASHER, gear cluster bearing rollers spacer 1-5/32" O.D.	
				O.D.
0703-12	458458	1	THRUST WASHER, front gear cluster - bronze	2-5/8"
0703-14	458459	1	THRUST WASHER, front of rear gear cluster - bronze	2-1/8"
0703-15	458460	1	THRUST WASHER, rear of rear gear cluster - steel	2-1/8"
0704 - TRANSMISSION REVERSE IDLER GEAR AND SHAFT (Plate 07-3)				
0704-1	458453	1	GEAR w/BUSHING, reverse idler	
0704-3	▲- - - -	1	BUSHING, reverse idler gear (not sold separately)	
0704-5	458463	1	SHAFT, reverse idler gear	
	g103905	1	KEY, woodruff 1/8" x 5/8"	
0705 - TRANSMISSION MAIN DRIVE, PINION AND BEARINGS (Plate 07-3)				
0705-1	1540811	1	PINION, main drive	
0705-1	458470	1	PINION, main drive	
	- - - -		BEARING, front, pinion	
			(see clutch pilot bearing - Group 0207)	
			Located in	**Thick**
0705-2	1541089	1	BEARING, rear pinion	
0705-8	371860	#	SNAP RING, small	pinion .087
0705-8	371861	#	SNAP RING, small	pinion .090
0705-8	371862	#	SNAP RING, small	pinion .093
0705-8	371863	#	SNAP RING, small	pinion .096
0705-8	423264	#	SNAP RING, small	pinion .099
0705-8	423265	#	SNAP RING, small	pinion .102
0705-9	458471	1	SNAP RING, large	bearing .0625
0705-10	193089	1	SLINGER, pinion rear bearing oil	
0705-12	458472	1	WASHER, pinion bearing	

TRANSMISSION OVERDRIVE UNIT

0720 - OVERDRIVE HOUSING (Plate 07-4)				
0720-1A	(No listing for 56J)			
0720-1B	(No listing for 56J)			
	g103880	2	PLUG, filler and drain 1/2" pipe	
	g179892	4	SCREW, to case 1/2" - 13 x 2-3/4"	
	g114608	4	WASHER, sh'prf. 1/2"	
0720-3	458488	1	GASKET, OD. housing (Incl. in gasket set 1540822)	
0720-6	458480	1	PLATE, OD. housing adapter	
0720-7	458479	1	GASKET, adapter plate (incl. in gasket set 1540822)	
0720-15	1540818	1	OIL SEAL, OD. housing	
0721 - OVERDRIVE SHAFT AND BEARING (Plate 07-4)				
0721-5	1540819	1	SHAFT, OD.	
0721-6	1540821	1	GEAR, OD. shaft ring	
0721-7	190895	#	SNAP RING .054 Thick	4-3/8" I.D.
0721-7	190896	#	SNAP RING .056 Thick	4-3/8" I.D.
0721-7	190897	#	SNAP RING .058 Thick	4-3/8" I.D.
0721-9	134030	1	BEARING, rear, OD. shaft	
0721-17	188521	#	SNAP RING .086 Thick	2-19/32" I.D.
0721-17	188522	#	SNAP RING .089 Thick	2-19/32" I.D.

ILLUST. NUMBER	PART NUMBER	PER CAR	DESCRIPTION
0721-17	188523	#	SNAP RING .092 Thick 2-19/32" I.D.
0721-17	188524	#	SNAP RING .095 Thick 2-19/32" I.D.
0721-20	1540820	1	SPACER, OD. shaft rear bearing
0721-23	(No listing for 56J)		

0722 - OVERDRIVE FREE WHEELING (FW) CAM (Plate 07-4)

0722-1	458489	1	CAM, FW clutch
0722-4	185630	#	SNAP RING .0625 Thick 1-3/32" I.D.
0722-4	418437	#	SNAP RING .068 Thick 1-3/32" I.D.
0722-4	418438	#	SNAP RING .074 Thick 1-3/32" I.D.
0722-12	347579	12	ROLLER, FW clutch cam
0722-16	347580	1	RETAINER, FW clutch roller
0722-22	188541	2	SPRING, FW clutch roller retainer

0725 - OVERDRIVE SHIFT (Plate 07-4)

0725-1	525341	1	FORK, OD. shift
0725-2	521434	1	PIN, OD. shift fork guide 2-1/16" long
0725-7	458494	1	RAIL, OD. shift
0725-11	525344	1	SPRING, OD. shift rail fork
0725-18	525342	1	WASHER, "C"
0725-19	525343	1	WASHER, cupped 45/64" O.D.
0725-35	521431	1	SPRING, OD. shift rail reverse lock up return
0725-42	458496	1	SHAFT and LEVER, OD. shift
0725-43	g103565	1	PIN locating 1-1/4" long
0725-44	674869	1	OIL SEAL, OD. shift shaft

0728 - OVERDRIVE PINION CAGE (Plate 07-4)

0728-1	418419	1	CAGE COMPLETE, OD. pinion
			(component parts of this cage not supplied separately)
0728-8	185630	1	SNAP RING, cage

0729 - OVERDRIVE STATIONARY OR SUN GEAR (Plate 07-4)

0729-2	418431	1	GEAR, OD. stationary or sun
0729-4	418432	1	COLLAR, OD. stationary or sun gear shifting
	418433	1	SNAP RING .0625 Thick 1-17/32" I.D.
0729-5	418436	1	PLATE and BLOCKING RING, stationary or sun gear
0729-9	522161	1	PLATE, OD. stationary or sun gear
			(SNAP RINGS located in adapter plate)
0729-11	521456	#	SNAP RING .0625 Thick 3-27/32" I.D.
0729-11	521457	#	SNAP RING .0665 Thick 3-27/32" I.D.
0729-11	521458	#	SNAP RING .0705 Thick 3-27/32" I.D.
0729-18	525345	1	PAWL, OD, stationary or sun gear

0731 - OVERDRIVE CUT-OUT CONTROL (Plates 07-4, 6)

0731-1	458502	1	SOLENOID, OD.
	g132903	2	SCREW, terminal No. 10 - 32 x 1/2"
	g120217	2	WASHER, lock No. 10
	g179814	2	SCREW, to adapter plate 5/16" - 18 x 5/8"
	g138485	2	WASHER, lock 5/16"
0731-4	535311	1	COVER, OD. solenoid (stamped 1118155)
0731-6	196183	1	OIL SEAL, OD. solenoid pawl operating rod
0731-12	529479	1	SWITCH, OD. accelerator kickdown
	195893	2	LOCK NUT, to bracket 7/16" - 20 (for 529479)
0731-19	1539595	1	RELAY, OD. solenoid control (located on dash)
	g177999	2	SCREW, to dash No. 14 x 1/2"
	g121540	4	SCREW, terminal No. 10 - 32 x 5/16"
	g120217	4	WASHER, lock No. 10

ILLUST. NUMBER	PART NUMBER	PER CAR	DESCRIPTION
0731-20	g120151	1	FUSE, OD. solenoid control relay - 15 amp.
0731-21	1540182	1	HARNESS, OD. control wiring Used on models before car serial 6031808, also used on 6031838, 6031839, 6031840)
0731-21	1540838	1	HARNESS, OD. control wiring Used on models on and after car 6031808, except 6031838, 6031839, 6031840)
	30264	*	TERMINAL, cables - eyelet 15/32"
	198667	*	TERMINAL, cables - push
	256116	*	TERMINAL, cables - spade
	31834	*	TERMINAL, cables - eyelet 13/64"
	190470	1	CLIP, to floor pan - open
	537671	1	CLIP, to transmission (Used on cars having overdrive transmission less lockout switch.)
	526600x3	*	CLIP, to harness or battery cable
	g177999	*	SCREW, to dash 1/4" x 1/2"
0731-22	530314	1	CABLE, chassis cable to OD. relay
0731-24	192545	*	CONNECTOR, trans. OD. cables

ILLUST. NUMBER	PART NUMBER	PER CAR	DESCRIPTION
0731-25	537672	1	CABLE, OD. harness to governor (Used on cars having overdrive transmission less lockout switch.)
	532855	1	GROMMET, OD. cables dash
0731-27	534866	1	GOVERNOR, OD. control (daubed with yellow paint)

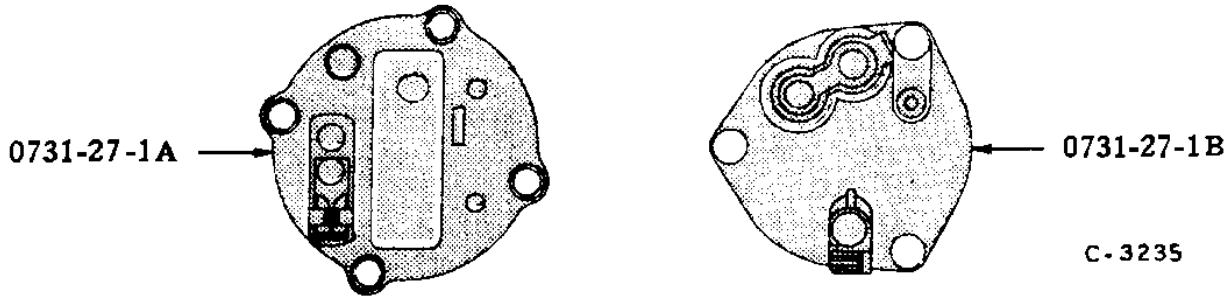

OVERDRIVE COVER W/GASKET - CONTROL GOVERNOR

0731-27-1A	536628	1	COVER w/GASKET, OD. control governor (stamped TGE-4011)
0731-27-1B	536630	1	COVER w/GASKET, OD. control governor (daubed with yellow paint)
0731-27-1	1547892	1	GASKET, OD. control governor cover
0731-28	522022	1	BOOT, OD. control governor - rubber
0731-29	1539105	1	GEAR, OD. control governor drive
0731-30	520086	1	GEAR, OD. control governor - 15 teeth (SW No. 448128) (located on governor)
0731-34	515708	1	SNAP RING, governor gear 23/64" I.D.

0732 - OVERDRIVE CONTROL - ON DASH (Plate 07-6)

0732-1	526114	1	BUTTON and WIRE, OD. control (cut to length required) Used on models before car serial 6032933
0732-1	1541458	1	BUTTON, WIRE, SLEEVE and TUBE, OD. control - LHC Used on and after car serials 6032933
0732-1	1541459	1	BUTTON, WIRE, SLEEVE and TUBE, OD. control - RHC Used on and after car serials 6032933
0732-2	537669x1	1	SLEEVE and TUBE, OD. control - LHC Used on cars having overdrive transmission with lockout switch. Used on models before car serial 6032933
0732-2	537669x2	1	SLEEVE and TUBE, OD. control - RHC Used on cars having overdrive transmission with lockout switch. Used on models before car serial 6032933
0732-2	1540196	1	SLEEVE and TUBE, OD. control Used on models before car serial 6032933
0732-2	▲- - - -	1	SLEEVE and TUBE, OD. control (part of 1541458 or 1541459) Used on and after car serials 6032933 *(Note: manual lists as "part of 15**14**458 or 15**14**459?")*
	287169	1	NUT, to inst. board 1/2" - 20
	g114608	1	WASHER, lock 1/2"
	519846	1	CLIP, to clutch housing
	1540133p	1	BRACKET, OD. control - C-K
	g155113	2	BOLT, to inst. board No. 10 - 24 x 1/2" C-K
	G271166	2	NUT and WASHER, No. 10 - 24 C-K
	g120391	2	WASHER, plain No. 10 C-K
0732-6	185336	1	SWIVEL, OD. control (on shifter lever)

ILLUST. NUMBER	PART NUMBER	PER CAR	DESCRIPTION
	195235	1	BOLT, on shifter lever 5/16" - 24 x 7/8"
	g103025	1	NUT, hex. 5/16" - 24
	g120214	1	WASHER, plain 5/16"
	g120393	1	WASHER, lock 5/16"
0732-10	458439	1	BRACKET, OD. control support Used on models before car serial 6032933
	537673	1	BRACKET, OD. control support Used on and after car serials 6032933
			(NOTE: The next 4 items are used on cars having overdrive transmission less lockout switch)
	537674	1	CLAMP, OD. control to support bracket
	g155348	1	BOLT, clamping 1/4" - 20 x 3/4"
	g120375	1	NUT, hex. 1/4" - 20
	g120380	1	WASHER, lock 1/4"

0745 - TRANSMISSION UNIVERSAL JOINT FLANGE (Plate 07-4)

0745-1	196406	1	FLANGE, universal joint
0745-3	179233	1	NUT, to transmission shaft 3/4" - 16
0745-4	180747	1	WASHER, plain 49/64"
0745-5	g103335	1	WASHER, lock 3/4"

0747 - GEARSHIFT FORKS AND LEVERS (Plates 07-3, 8)

0747-6	458430	1	SHOE, gearshift low and rev. (also known as fork)
0747-9	458429	1	FORK, gearshift second and high
0747-11	458427	1	LEVER and SHAFT, inner, low and rev. shift
0747-13	458424	1	LEVER and SHAFT, inner, second & high shift
0747-14	684881	2	OIL SEAL, inner shift lever shaft
0747-21	458434	#	SLEEVE, inner shift lever interlock 1.0085 Length
0747-21	458432	#	SLEEVE, inner shift lever interlock 1.0185 Length
0747-21	458433	#	SLEEVE, inner shift lever interlock 1.0195 Length
0747-21	458435	#	SLEEVE, inner shift lever interlock 1.0235 Length
0747-22	458431	1	SPRING, inner shift lever interlock 51/64" Length
0747-23	458436	1	PLUNGER, inner shift lever interlock
0747-28	g453593	2	BALL, bearing, inner shift lever interlock - 3/8"
0747-50	1539603	1	LEVER, outer, low and rev. shift - LHC
0747-51	1539601	1	LEVER, outer, second and high shift - LHC
	g120376	2	NUT, to inner lever 5/16" - 18
	g120393	2	WASHER, plain 5/16"
	g120214	2	WASHER, lock 5/16"
0747-52	197565	2	INSULATOR, outer shift lever - LHC

STEERING POST GEARSHIFT

0756 - GEARSHIFT HAND LEVER AND SHAFT (Plates 07-8, and 13-1)

0756-1	532996p	1	LEVER, gearshift (painted) (for threaded type knob)
0756-4	532886	1	PIN, pivot tubular 1" long
0756-14	532551	1	GROMMET, lever
0756-20	533343x3	1	KNOB, gearshift lever (Black) threaded type
0756-31	534092p	1	SUPPORT, lever
0756-33	532545	1	WASHER, spring 1-1/2" I.D.
0756-45	534094	1	SHAFT, gearshift tubular (less power steer.)
0756-45	534096	1	SHAFT, gearshift tubular (with power steer.) C-K
0756-52	532878	1	BRACKET, w/BEARING, upper gearshift shaft (less power steer.)
0756-52	534411	1	BRACKET, w/BEARING, upper gearshift shaft (w/power steer.)
0756-56	532549	2	BOLT, anchor, to jacket (special)

ILLUST. NUMBER	PART NUMBER	PER CAR	DESCRIPTION
	532550	2	NUT, special 1/4" - 28
(1305-10)	- - - -	1	BEARING, steering post (see group 1305)
0756-77	535436	1	SPRING, shaft
0756-79	532547	1	RETAINER, spring
0756-82	532548	1	HOUSING, shaft spring

0759 - GEARSHIFT CROSS SHIFT (Plate 07-8)

0759-7	532553p	1	LEVER, second and high (less P.S.)
0759-7	533275p	1	LEVER, second and high (with P.S.)
0759-16	532879	1	LEVER w/GREASE FITTINGS, low and rev. (less P.S.)
0759-16	533328	1	LEVER w/GREASE FITTINGS, low and rev. (with P.S.)
0759-18	3036x3	1	GREASE FITTING, low and reverse lever
0759-19	532554	1	SPACER, shift levers

0760 - GEARSHIFT RODS (Plate 07-8)

0760-1	1540179	1	ROD, low and rev. shift (less P.S.)
0760-1	1540209	1	ROD, low and rev. shift (with P.S.)
0760-4	1540207	1	ROD, second and high shift (less power steer.)
0760-4	1540211	1	ROD, second and high shift (with power steer.)
0760-5	(No listing for 56J)		
0760-6	g120394	*	WASHER, plain (use with 192057)
	- - - -	*	COTTER, 3/32" x 1"
0760-8	197219	2	CLEVIS, gearshift rod - LHC
0760-9	g120369	2	NUT, lock 3/8" - 24 - LHC
	42x57	2	PIN, clevis, 5/16" x 1-3/16" (for 197219) - LHC
	184291	2	WASHER, spring 21/64" (for 197219) - LHC
	- - - -	2	COTTER, 3/32" x 1" - LHC

* - Use as required
▲ - Not available
\# - Select size required

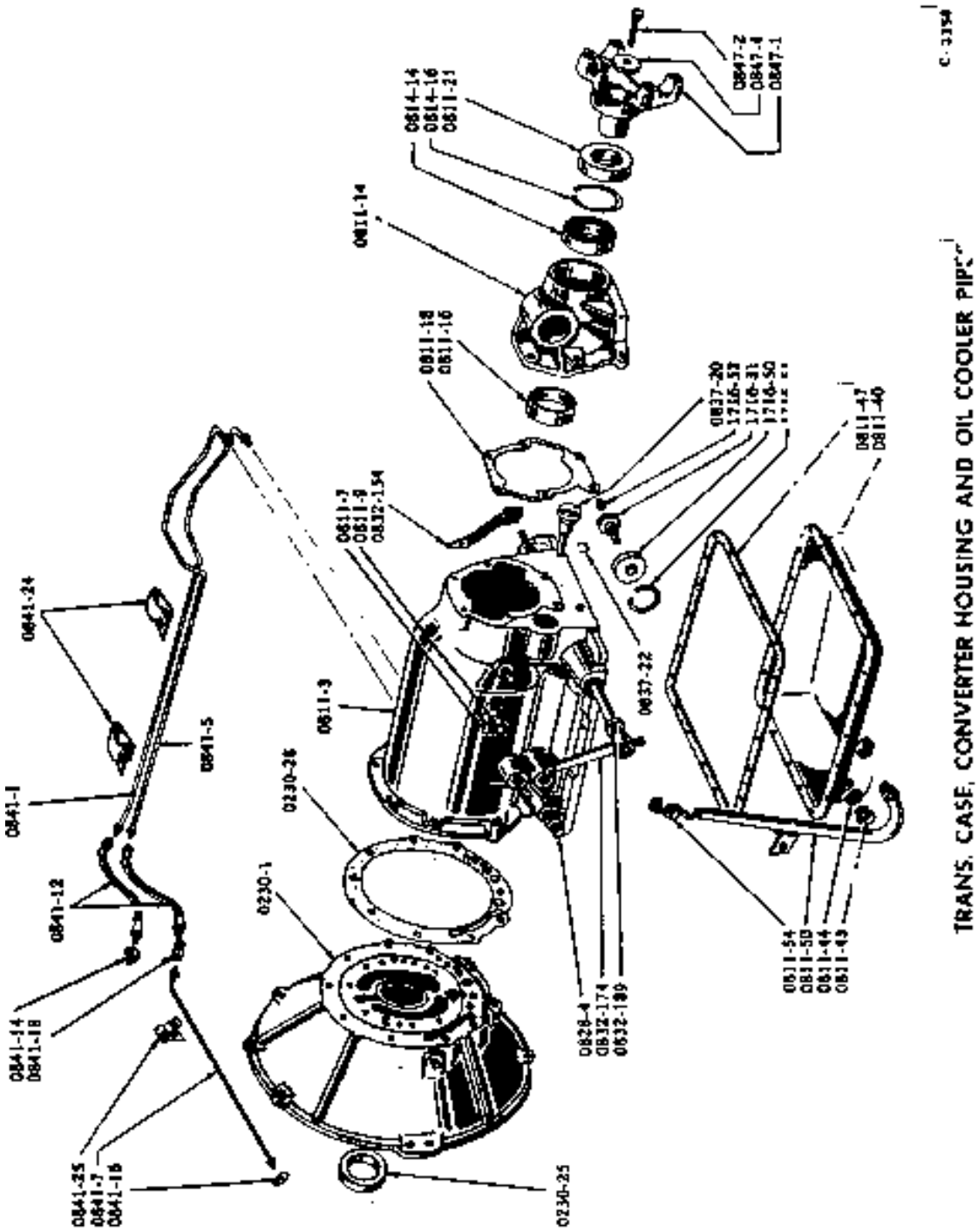

TRANS. CASE, CONVERTER HOUSING AND OIL COOLER PIPES

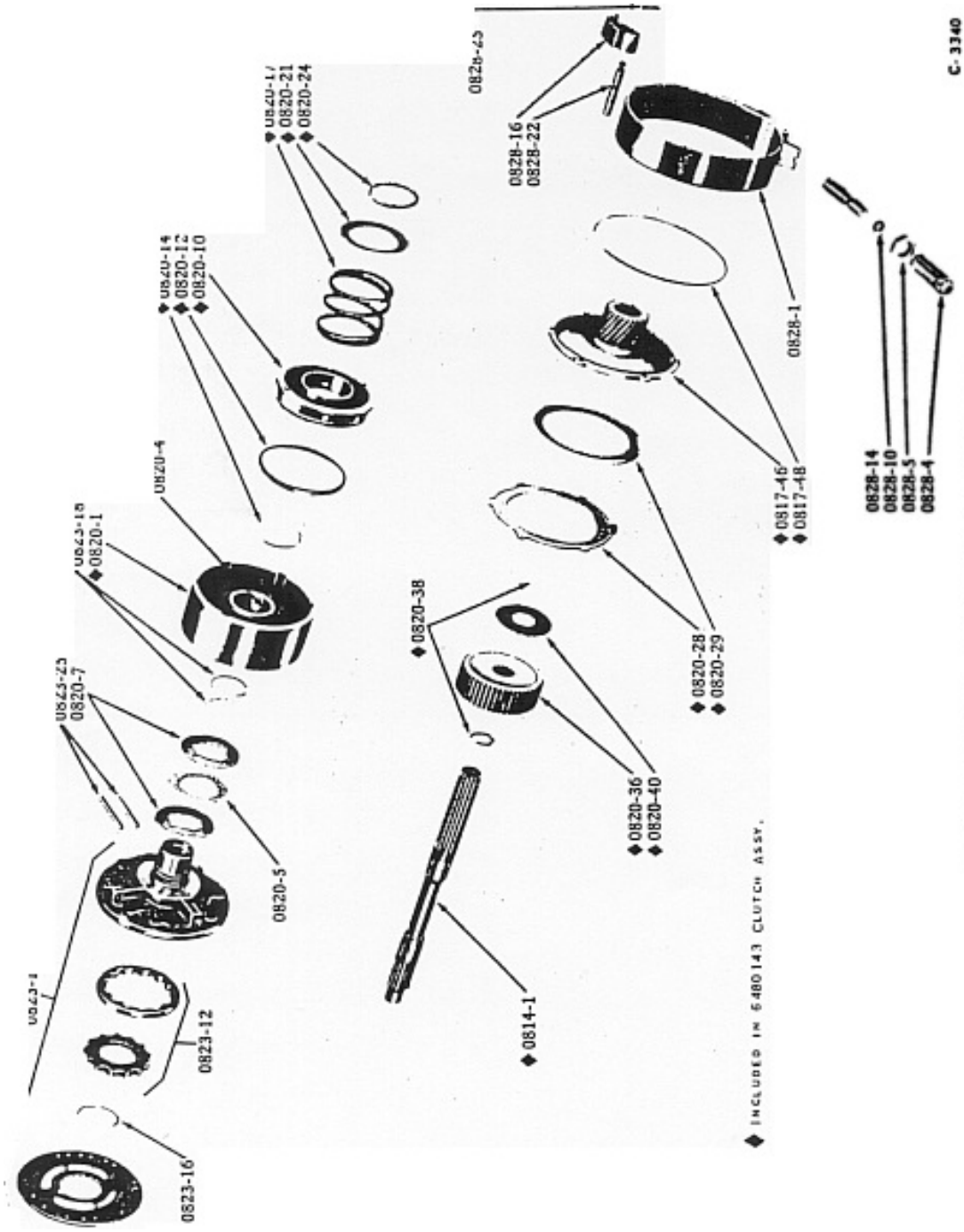

FRONT OIL PUMP, CLUTCH, INPUT SHAFT ETC.

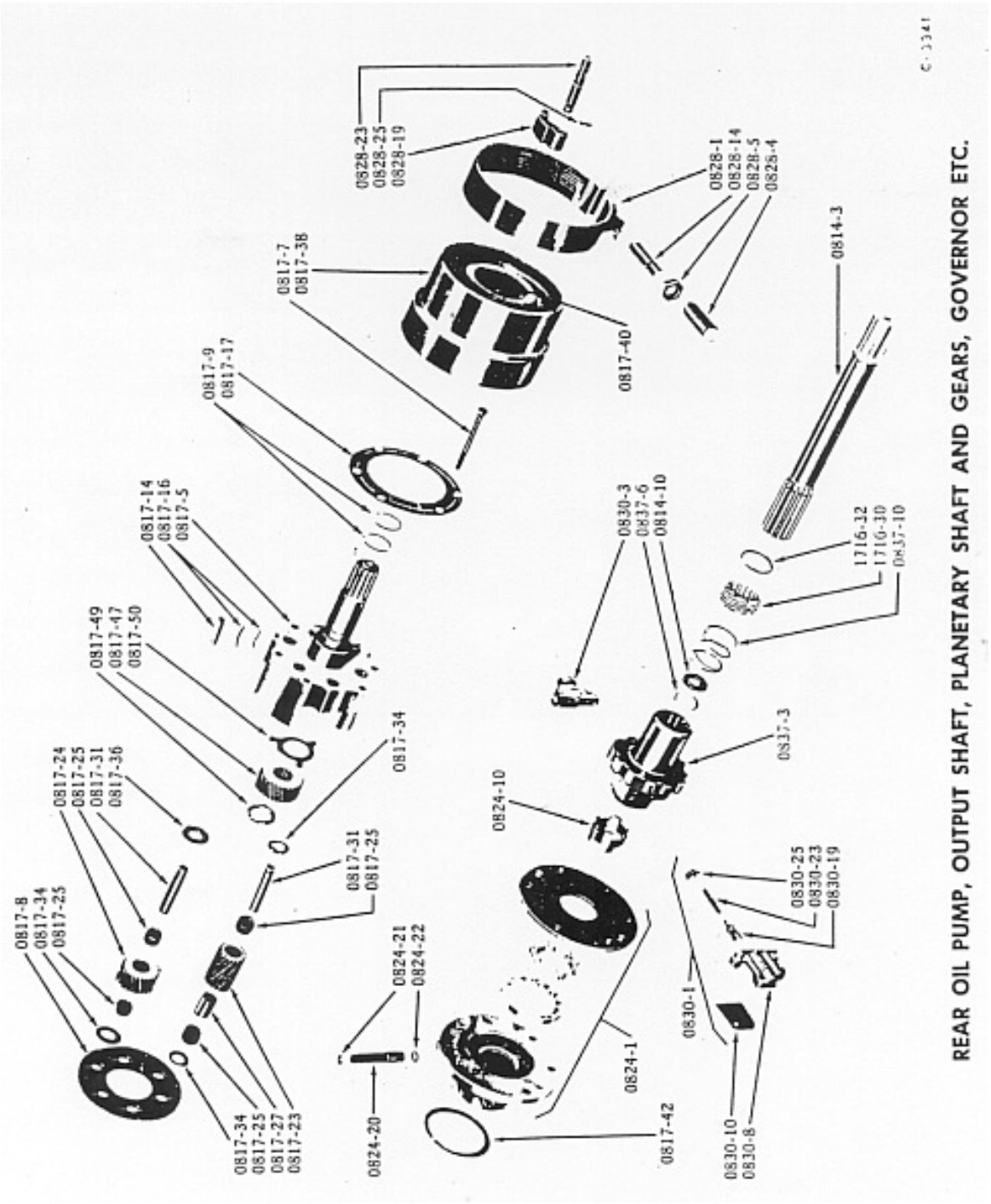
0828-23
0828-25
0828-19
0828-1
0828-14
0828-5
0825-4
0814-3
0817-7
0817-38
0817-40
0817-9
0817-17
0817-14
0817-16
0817-5
0830-3
0837-6
0814-10
1716-32
1716-30
0837-10
0817-49
0817-47
0817-50
0817-34
0837-3
0817-24
0817-25
0817-31
0817-36
0824-10
0817-31
0817-25
0830-25
0830-23
0830-19
0817-8
0817-34
0817-25
0824-21
0824-22
0830-1
0824-1
0817-34
0817-25
0817-27
0817-23
0824-20
0817-42
0830-10
0830-8
REAR OIL PUMP, OUTPUT SHAFT, PLANETARY SHAFT AND GEARS, GOVERNOR ETC.

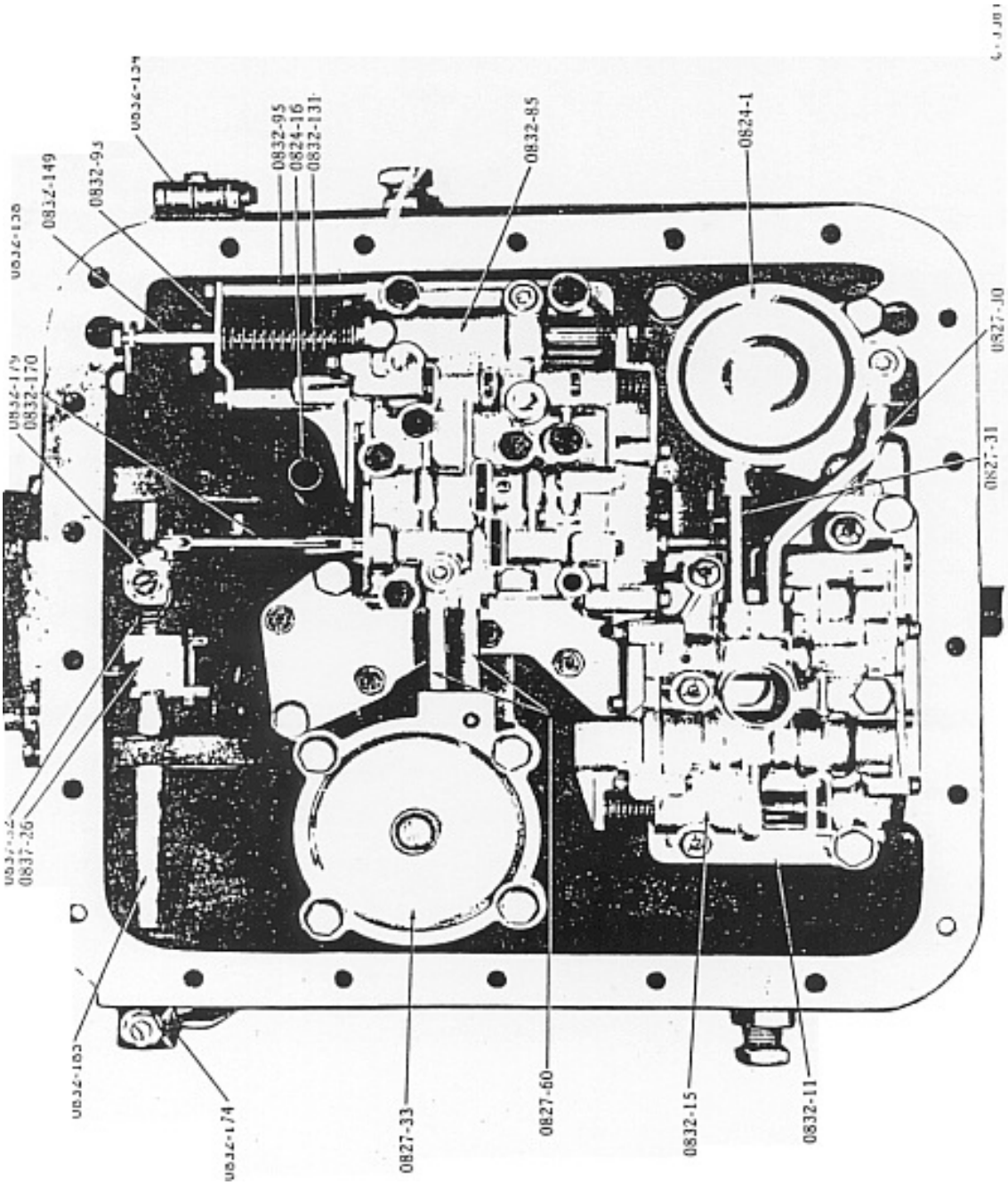

TRANSMISSION CONTROLS (BOTTOM VIEW)

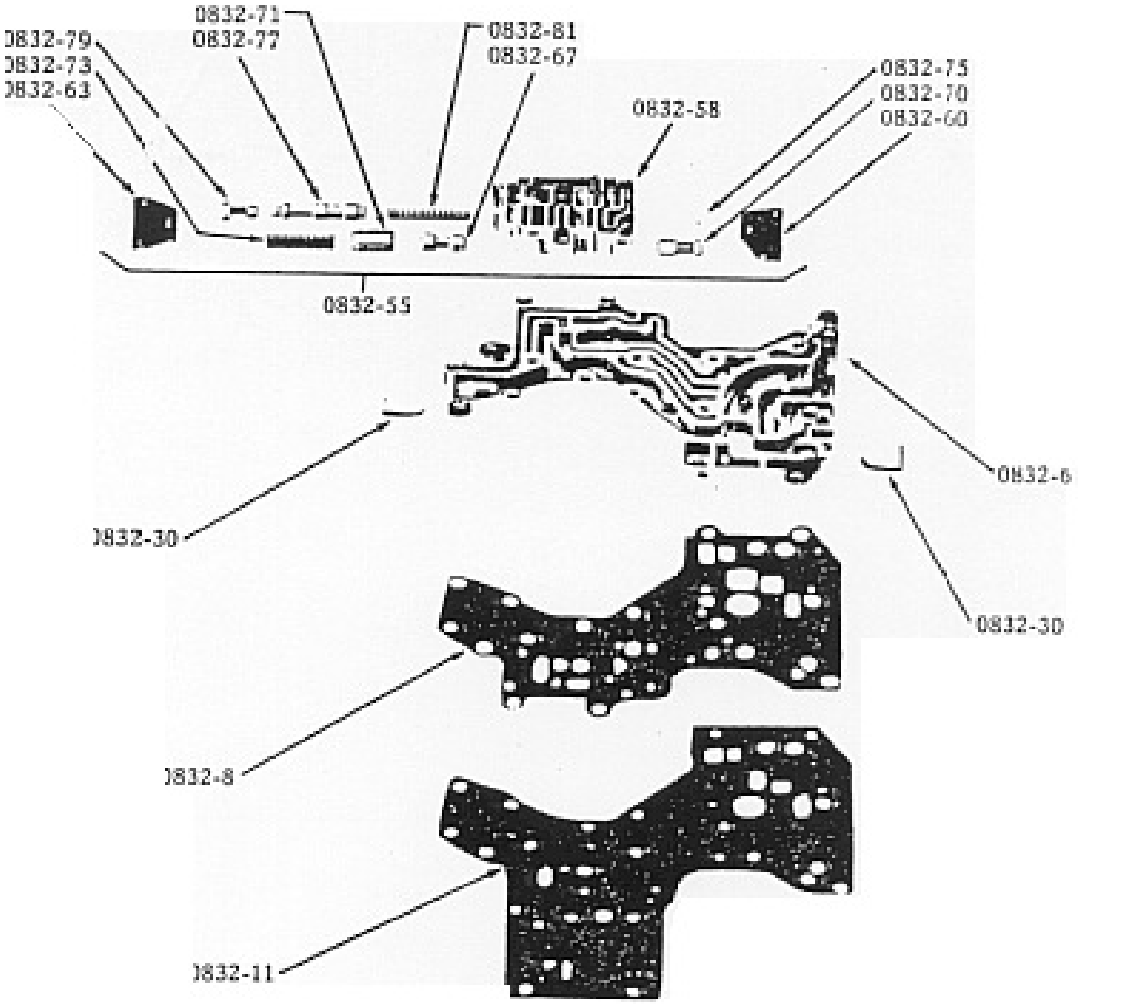

C-3344

CONTROL VALVE MANIFOLD AND UPPER REAR CONTROL

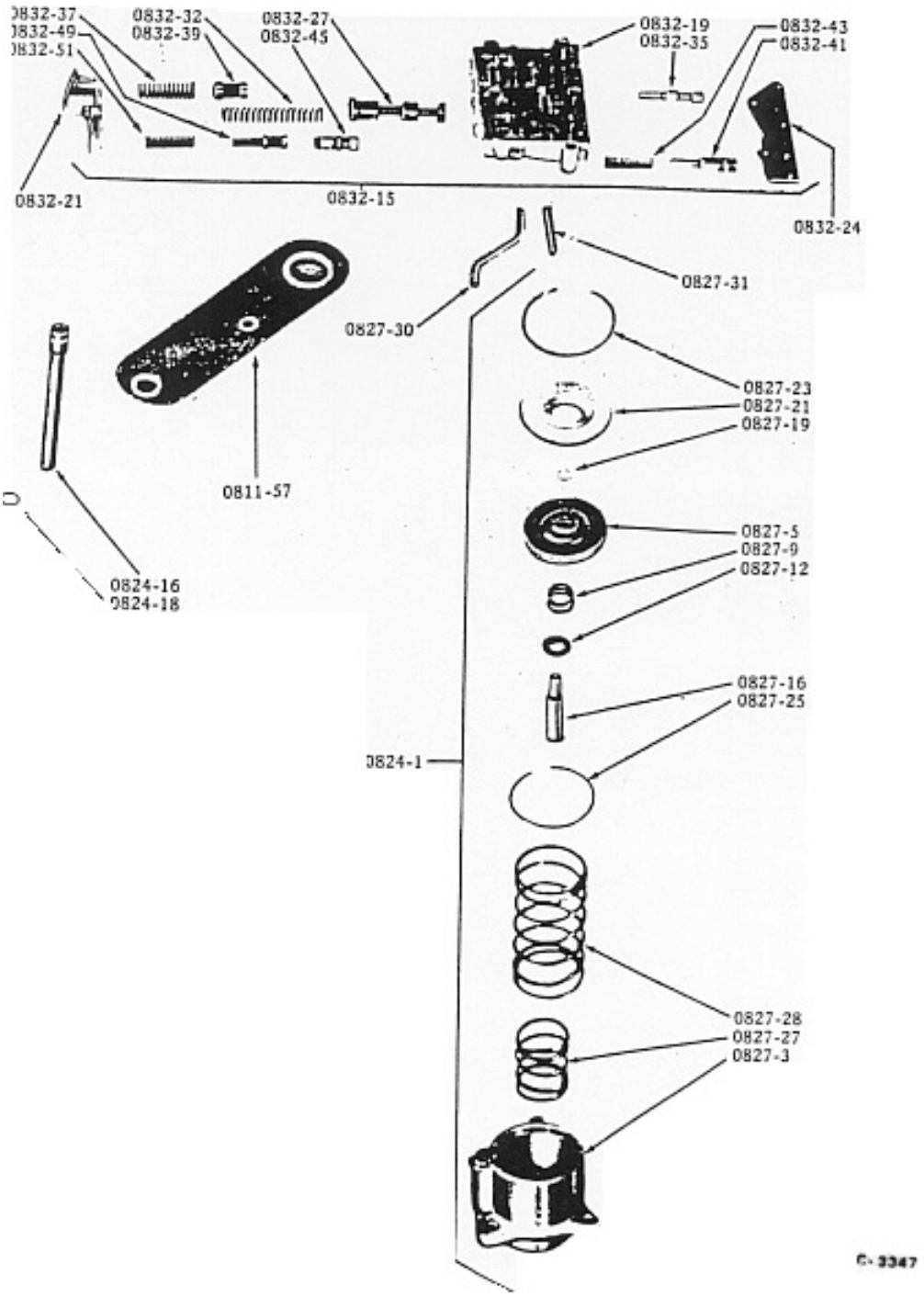

FRONT CONTROL AND LOW BRAKE

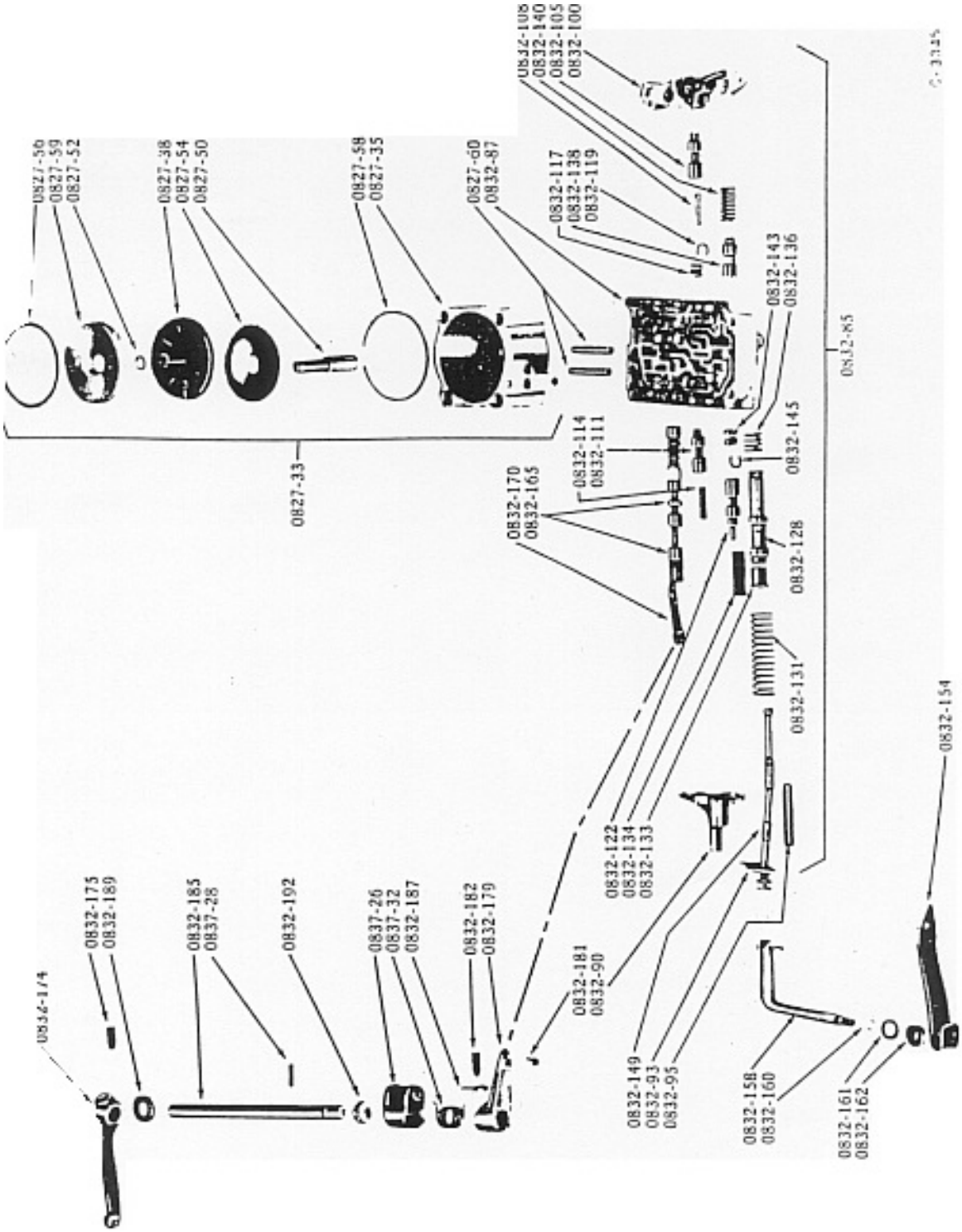

LOWER REAR CONTROL, REVERSE BRAKE, TRANS SHIFT AND THROTTLE CONTROLS

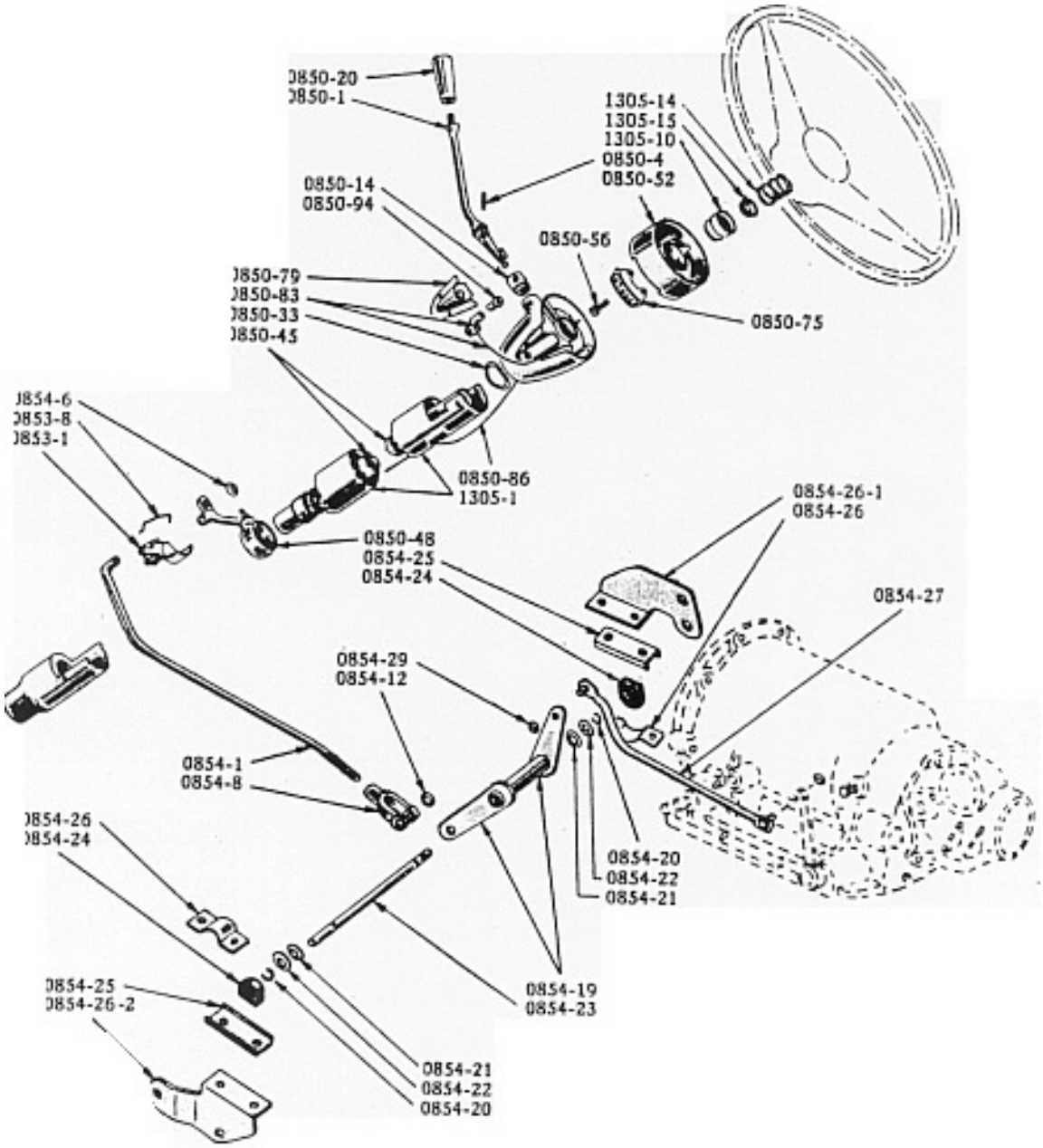

HAND CONTROL

ILLUST. NUMBER	PART NUMBER	PER CAR	DESCRIPTION
0800B - ULTRAMATIC TRANSMISSION			
			The transmission serial number is stamped on lower left rear of case.
	6484153	1	TRANSMISSION ASSEMBLY, ultramatic
			(- less converter and bell housing)
	g179861	8	SCREW, to bell housing 7/16" - 14 x 1-3/8"
	470059	8	WASHER, plain (special)
	g120383	8	WASHER, lock 7/16"
0811B - TRANSMISSION CASE (Plate 08-9)			
0811-3	470060	1	CASE ASSEMBLY, transmission
	g127952	1	PLUG, oil level (brass)
0811-7	470096	1	BREATHER, trans. case
0811-9	470097	1	ELBOW, breather
0811-14	6480749	1	HOUSING and BUSHING, trans. case extension
	- - - -	4	SCREW, to case 5/16" - 18 x 1-3/8"
	6480655	2	SCREW, to case 5/16" - 18 x 1-1/8"
	433134	6	WASHER, plain (special)
	g120214	4	WASHER, lock 5/16"
0811-16	470115	1	BUSHING, trans. case extension housing
	- - - -	1	BEARING, housing (see BEARING output shaft-Group 0814)
0811-18	470147	1	GASKET, housing to case
0811-21	6470203	1	OIL SEAL, housing
0811-40	6480501	1	PAN ASSEMBLY, trans. case oil
0811-43	426205	1	PLUG, oil drain
0811-44	433248	1	GASKET, plug (copper)
	g217233	20	SCREW and WASHER, to case 5/16" - 18 x 3/4"
0811-47	421327	1	GASKET, trans. case oil pan
0811-50	1539738	1	TUBE, trans. oil filler
0811-54	1539737	1	CAP and DIPSTICK, trans. oil filler tube
0811-57	450533	1	STRAINER, trans. oil (see Plate 08-14)
	g445177	1	CLIP, strainer
	450843	1	SCREW, strainer mounting 1/4" - 20 x 2-11/32"
	g120392	1	WASHER, plain 9/32"
	- - - -	1	WASHER, lock 1/4"
0814B - TRANSMISSION INPUT and OUTPUT SHAFT (Plates 08-10, 11)			
0814-1	6479112	1	SHAFT, input
0814-3	6480049	1	SHAFT, output
			Thick
0814-10	6470270	*	SPACER, output shaft .020
0814-10	6470271	*	SPACER, output shaft .033
0814-10	6470272	*	SPACER, output shaft .046
0814-10	6470273	*	SPACER, output shaft .059
0814-10	6470274	*	SPACER, output shaft .072
0814-10	6470275	*	SPACER, output shaft .085
0814-14	423215	1	BEARING, output shaft
0814-16	423293	1	SNAP RING, bearing
	- - - -	1	BUSHING, output shaft (see BUSHING, extension housing Group 0811)

ILLUST. NUMBER	PART NUMBER	PER CAR	DESCRIPTION
0817B - TRANSMISSION PLANETARY SHAFT, GEARS, ETC. (Plate 08-10)			
	6480716	1	SHAFT ASSEMBLY, planetary
			Consists of the following items marked thus ○
0817-5-8	6484331	1	○ SHAFT and GAGE, planetary (incl. cover plate)
0817-7	g112752	6	○ SCREW, cover plate to cage 5/16" - 24 x 3-3/8"
0817-8	- - - -	1	○ PLATE, planetary shaft & cage cover (not sold separately)
0817-9	450350	2	○ RING, shaft and cage oil
0817-14	450332	3	○ DAMPER, shaft and cage oil
0817-16	450493	6	○ SPRING, shaft and cage damper
0817-17	450492	1	○ SCOOP, shaft and cage oil
0817-23	450494	3	○ PINION, long, planetary
0817-24	421087	3	○ PINION, short, planetary
0817-25	450123	228	○ ROLLER, planetary pinion bearing (pkge.)
0817-27	450491	3	○ SPACER, bearing roller
0817-31	450298	6	○ SHAFT, planetary pinion
	- - - -	6	○ KEY, woodruff 1/16"x1/2"
0817-34	421146	9	○ THRUST WASHER, planetary pinion
0817-36	450495	3	○ THRUST WASHER, planetary short pinion rear
0817-38	450312	1	○ GEAR and BRAKE DRUM, planetary ring (incl. bushing)
0817-40	458923	1	BUSHING, planetary ring gear and brake drum
0817-42	6480640	1	THRUST WASHER, planetary ring gear
0817-46	470109	1	SUN GEAR, front, planetary
0817-47	6470339	1	○ SUN GEAR, rear, planetary
0817-48	421071	1	SNAP RING (for 470109 Sun Gear)
0817-49	470114	1	BEARING, thrust, planetary sun gear
0817-50	450860	1	○ THRUST WASHER, planetary sun gear
0820B - TRANSMISSION CLUTCH (Plate 08-10)			
0820-1	6484046	1	HOUSING and BUSHING, high range clutch
	g147483	1	BALL, steel 3/16"
0820-4	470076	1	BUSHING, high range clutch housing
0820-5	6470118	1	BEARING, high range clutch housing thrust
0820-7	6470117	1	WASHER, thrust bearing
0820-10	470069	1	PISTON, high range clutch
0820-12	470077	1	SEAL, high range clutch piston
0820-14	423367	1	RING, high range clutch piston
0820-17	470182	1	SPRING, high range clutch piston
0820-21	450519	1	RETAINER, high range clutch piston spring
0820-24	421089	1	SNAP RING, retainer
0820-28,29	6480143	1	CLUTCH ASSY., high range - consists of items on plate 08-10 marked thus ♦
0820-28	6470245	6	PLATE, driven, high range clutch
0820-29	421128	6	PLATE, driving, high range clutch
0820-36	6470337	1	HUB, high range clutch
0820-38	421905	2	SNAP RING, clutch hub
0820-40	6480641	1	THRUST WASHER, high range clutch hub

ILLUST. NUMBER	PART NUMBER	PER CAR	DESCRIPTION
0823B - FRONT PUMP (Plate 08-10)			
0823-1	▲6470303	1	PUMP ASSEMBLY, front oil (use 6484524 pump and shaft kit) Pump rotor 7/16" width and has 20 splines, used before transmission serial S-2463.
	6484524	1	PUMP and SHAFT KIT, front oil Pump rotor 7/16" width and has 40 splines, replacement for 20 spline type before transmission serial S-2463.
0823-1	6489368	1	PUMP ASSEMBLY, front oil Pump rotor 7/16" width and has 40 splines, used on and after transmission serial S-2463.
	g179821	8	SCREW, to bell housing 5/16" - 18 x 1-3/8"
	g120214	8	WASHER, lock 5/16"
	▲- - - -	1	HOUSING, front pump (not sold - order pump assy.)
0823-12	▲450269	1	ROTOR, front pump - (use 6484523 rotor & shaft kit) Pump rotor 7/16" width and has 20 splines, used before transmission serial S-2463.
	6484523	1	ROTOR and SHAFT KIT, front oil pump Pump rotor 7/16" width and has 40 splines, replacement for 20 spline type before transmission serial S-2463.
0823-12	6489367	1	ROTOR, front oil pump Pump rotor 7/16" width and has 40 splines, used on and after transmission serial S-2463.
0823-16	450337	1	SPACER, front oil pump rotor
0823-18	470073	1	RING, sealing, front pump housing
0823-25	450265	2	TUBE, front pump oil jumper
0824B - REAR PUMP (Plate 08-11)			
0824-1	6480123	1	PUMP ASSEMBLY, rear oil
	g180081	5	SCREW, fastening 5/16" - 18 x 1-1/4"
	g180085	1	SCREW, fastening 5/16" - 18 x 1-3/4"
	g120214	6	WASHER, lock 5/16"
0824-10	6489292	1	DRIVER, rear oil pump
0824-16	450307	1	TUBE, rear oil pump suction jumper
0824-18	450379	1	"O" RING, tube
0824-20	450306	1	TUBE, rear oil pump discharge jumper
0824-21	450309	1	"O" RING, upper, tube - .364 I.D.
0824-22	450310	1	"O" RING, lower, tube - .426 I.D.
0824-23	450521	1	TUBE, rear oil pump governor jumper
0824-24	450522	1	"O" RING, upper, tube - .239 I.D.
0824-25	450523	1	"O" RING, lower, tube - .301 I.D.

ILLUST. NUMBER	PART NUMBER	PER CAR	DESCRIPTION
0827B - SERVO UNITS (Plates 08-12, 14, 15)			
			Low Brake Assembly
0827-1	6480649	1	BRAKE ASSEMBLY, low (use 6489609)
0827-1	6489609	1	BRAKE ASSEMBLY, low
	g444687	1	PLUG, pipe 1/8" - 27
	g179825	1	SCREW, to case 5/16" - 18 x 1-7/8"
	g179819	2	SCREW, to case 5/16" - 18 x 1-1/8"
	g120393	3	WASHER, plain 5/16"
	g115548	3	WASHER, lock 5/16"
0827-3	▲- - - -	1	HOUSING, low brake (not sold separately) not available
0827-5	450430	1	■PISTON, low brake (must be used with 470266 cap)
			■Part number is cast on face of piston. Replace like part.
0827-5	6470257	1	■PISTON, low brake (must be used with 6470246 cap)
			■Part number is cast on face of piston. Replace like part.
0827-9	470001	1	SPRING, low brake piston cushion
0827-12	470004	1	SEAT, low brake piston cushion spring
0827-16	450431	1	GUIDE, low brake piston
0827-19	450432	1	SNAP RING, guide
0827-21	6470246	1	CAP, low brake piston housing
			(must be used with 6470257 piston)
0827-21	470266	1	CAP, low brake piston housing
			(must be used with 450430 piston)
0827-23	450435	1	SNAP RING, cap
0827-25	450856	1	SEAL, low brake piston
0827-27	470183	1	SPRING, inner, low brake piston (for 6480649)
0827-28	450437	1	SPRING, outer, low brake piston
0827-30	450890	1	TUBE, long, low brake oil jumper
0827-31	450891	1	TUBE, short, low brake oil jumper
			Reverse Brake Assembly
0827-33	450474	1	BRAKE ASSEMBLY, reverse
	g179828	4	SCREW, to case 5/16" - 18 x 2-1/2"
	g120393	4	WASHER, plain 5/16"
	g115548	4	WASHER, lock 5/16"
0827-35	- - - -	1	HOUSING, reverse brake (not sold separately)
0827-38	450854	1	PISTON, reverse brake
0827-50	450444	1	GUIDE, reverse brake piston
0827-52	450445	1	SNAP RING, guide
0827-54	450442	1	CAP, reverse brake piston housing
0827-56	450443	1	SNAP RING, cap
0827-58	450857	1	SEAL, reverse brake piston
0827-59	450440	1	SPRING WASHER, reverse brake piston
0827-60	450401	2	TUBE, reverse brake oil jumper
0828B - SERVO BANDS (Plates 08-10, 11)			
0828-1	6489039	2	BAND and LINING, low and reverse brake
0828-4	6489482	2	SCREW, adjusting
0828-5	g107829	2	NUT, screw lock hex. 3/4" - 16"
0828-10	450348	2	SEAL, brake band adjusting screw
0828-14	450203	2	PIN, brake band anchor
0828-16	6470244	1	LEVER, low brake band
	450540	1	PIN, lever locating
0828-19	450075	1	LEVER, reverse brake band
	450541	1	PIN, lever locating
0828-22	450092	1	SHAFT, low brake band lever

ILLUST. NUMBER	PART NUMBER	PER CAR	DESCRIPTION
0828-23	450091	1	SHAFT, reverse brake band lever
0828-25	450095	2	PIN, shaft

0830B - TRANSMISSION GOVERNOR (Plate 08-11)

0830-1	6480826	1	GOVERNOR ASSEMBLY, trans. high speed
0830-3	6489627	1	GOVERNOR ASSEMBLY, trans. low speed
	g217904	4	SCREW, to parking gear 1/4" - 20 x 7/8"
	- - - -	4	WASHER, lock 1/4"
0830-8	450352	1	BODY, high speed governor
	- - - -	1	BODY, low speed governor (not sold separately)
0830-10	450544	1	PLATE, high speed governor
	g451735	1	SCREW and WASHER, to body No. 10 - 24 x 3/8"
	g110486	1	SCREW, to body No. 10 - 24 x 3/8"
	g106497	1	WASHER, lock No. 10
	450537	1	PLATE, low speed governor
	g110486	2	SCREW, to body No. 10 - 24 x 3/8"
	g106497	2	WASHER, lock No. 10
0830-19	450768	1	VALVE, high speed governor
0830-23	450358	1	SPRING, high speed governor valve
0830-25	450546	1	SEAT, high speed governor valve spring

0832B - CONTROL VALVE (Plates 08-12, 13, 14, 15)

	6480151	1	CONTROL ASSEMBLY, trans. - consists of:
			1 6480808 Body, front
			1 6480802 Body, rear upper
			1 6480358 Body, rear lower
			1 465841 Manifold
			1 450861 Gasket
			1 6470261 Plate
	- - - -	2	SCREW, to case 5/16" - 18 x 1-3/8"
	g179827	3	SCREW, to case 5/16" - 18 x 2-1/4"
	g120393	5	WASHER, plain 5/16"
	g115548	5	WASHER, lock 5/16"
0832-6	465841	1	MANIFOLD, trans. oil control
0832-8	450861	1	GASKET, trans. oil control manifold
0832-11	6489478	1	PLATE, trans. oil control valve separator
	g179795	4	SCREW, to manifold 1/4" - 20 x 1/2"
	g120392	4	WASHER, plain 1/4"
	- - - -	4	WASHER, lock 1/4"

Front Control

0832-15	6480808	1	BODY ASSEMBLY, front control (incl. in 6480151)
	g179803	4	SCREW, to manifold 1/4" - 20 x 1-3/4"
	g120392	4	WASHER, plain 1/4"
	- - - -	4	WASHER, lock 1/4"
0832-19	450340	1	BODY, front control
0832-21	470053	1	COVER, front control body
	g110488	3	SCREW, to body No. 10 - 24 x 5/8"
	g106497	3	WASHER, lock No. 10
0832-24	450449	1	PLATE, front control body
	- - - -	6	SCREW, to body No. 10 - 24 x 3/8"
	g106497	6	WASHER, lock No. 10
0832-27	470054	1	VALVE, pump regulator
0832-30	6489942	2	VALVE, pump check
0832-32	470174	1	SPRING, pump regulator valve
0832-35	450894	1	VALVE, converter inlet
0832-37	6480754	1	SPRING, converter inlet valve
0832-39	450381	1	PISTON, converter inlet valve

ILLUST. NUMBER	PART NUMBER	PER CAR	DESCRIPTION
0832-41	470008	1	VALVE, low regulator
0832-43	6480356	1	SPRING, low regulator valve
0832-45	450528	1	VALVE, shift regulator
0832-49	450529	1	PISTON, shift regulator valve
0832-51	450407	1	SPRING, shift regulator valve piston
			Upper Rear Control
0832-55	6480802	1	BODY ASSEMBLY, upper rear control (incl. in 6480151)
			for fastening parts see body assy., lower rear
0832-58	6480800	1	BODY, upper rear control
0832-60	450714	1	PLATE, front, upper rear control body
0832-63	450715	1	PLATE, rear, upper rear control body
	- - - -	6	SCREW, to body No. 10 - 24 x 7/16"
	g106497	6	WASHER, lock No. 10
0832-67	450707	1	VALVE, control body direct shift
0832-70	450706	1	PISTON, front, control body direct shift valve
0832-71	470187	1	PISTON, rear control body direct shift valve
0832-73	470186	1	SPRING, control body direct shift valve piston
0832-75	470208	1	CAP, control body direct shift valve piston spring end
0832-77	450795	1	VALVE, control body low high shift
0832-79	470204	1	PISTON, control body low high shift valve
0832-81	450798	1	SPRING, control body low high shift valve
			Lower Rear Control
0832-85	6480358	1	BODY ASSEMBLY, lower rear control (incl. in 6480151)
	g179803	7	SCREW, fastening 1/4" - 20 x 1-3/4"
	g120392	7	WASHER, plain 1/4"
	- - - -	7	WASHER, lock 1/4"
0832-87	6480799	1	BODY, lower rear control
	g444687	1	PLUG, body 1/8" - 27
0832-90	450722	1	COVER, lower rear control body
	g110488	2	SCREW, to body No. 10 - 24 x 5/8"
	g106497	2	WASHER, lock No. 10
0832-93	450773	1	PLATE, lower rear control body
0832-95	450775	1	SPACER
	- - - -	1	SCREW, to body No. 10 - 24 x 3/8"
	g117278	1	SCREW, to body No. 10 - 24 x 2-1/2"
	g106497	2	WASHER, lock No. 10
0832-100	450756	1	DETENT, control body
	g110490	3	SCREW, to body No. 10 - 24 x 7/8"
	g106497	3	WASHER, lock No. 10
0832-105	450395	1	VALVE, control body modulating
0832-108	450397	1	SPRING, control body modulating valve
0832-111	450395	1	VALVE, control body reverse shuttle
0832-114	450397	1	SPRING, control body reverse shuttle valve
0832-117	470009	1	PLUG, control body reverse shuttle valve
0832-119	450550	1	RING, retaining
0832-122	450858	1	VALVE, control body direct shift throttle
0832-124	470185	1	SPRING, control body direct shift throttle valve
0832-128	450793	1	VALVE, control body throttle
	g446891	1	BOLT, fastening No. 8 - 32 x 5/8"
	g120622	1	NUT, lock hex. No. 8 - 32
0832-131	6480467	1	SPRING, control body throttle valve
0832-133	450774	1	SEAT, control body throttle valve spring
0832-134	NOT LISTED		
0832-136	6480718	1	SPRING, control body throttle valve idle
0832-138	450418	1	VALVE, control body throttle limit
0832-140	470217	1	SPRING, control body throttle limit valve
0832-143	6480795	1	PLUG, control body throttle limit valve
0832-145	450550	1	RING, retaining

ILLUST. NUMBER	PART NUMBER	PER CAR	DESCRIPTION
0832-149	450472	1	SHAFT, control body throttle valve operating
	450580	1	RING, retaining
0832-154	450467	1	LEVER, outer, throttle valve operating
	g181574	1	BOLT, clamping 1/4" - 28 x 1-3/8"
	g442824	1	NUT, hex. 1/4" - 28
	450649	2	WASHER, plain 1/4"
0832-158	450468	1	LEVER, inner, throttle valve operating
	g442918	1	PIN, groove
0832-160	450014	1	RING, retaining
0832-161	450013	1	WASHER, plain (special)
0832-162	6470207	1	SEAL, throttle valve operating inner lever
0832-165	450398	1	VALVE, lower rear control body manual
	450556	1	PIN, to link
0832-170	450399	1	LINK, manual valve operating
0832-174	6480732	1	LEVER, outer, manual valve operating
0832-175	470106	1	SET SCREW, to shaft 5/16" - 24 x 15/16"
	g120368	1	NUT, hex. 5/16" - 24
0832-179	450372	1	LEVER, inner, manual valve operating
0832-181	450692	1	PIN, inner lever to link
0832-182	470106	1	SET SCREW, to shaft 5/16" - 24 x 15/16"
	g120368	1	NUT, set screw hex. 5/16" - 24
	g120214	1	WASHER, lock 5/16"
0832-185	6480408	1	SHAFT, manual valve operating
0832-187	6480965	1	CLIP, shaft stop
0832-189	6470206	1	SEAL, manual valve operating shaft
0832-192	6480731	1	COLLAR, manual valve operating lever locating
	g102695	1	SET SCREW, No. 10 - 24 x 3/8"

0837B - TRANSMISSION PARKING GEAR (Plates 08-9, 11, 15)

0837-3	6470248	1	GEAR, trans. parking lock
0837-6	450302	1	SNAP RING, gear
0837-10	450239	1	SPRING, trans. parking lock gear
	450333	1	LEVER, trans. parking lock gear
	470150	1	SPRING, trans. parking lock gear lever
0837-20	450479	1	SUPPORT, trans. parking lock gear lever
0837-22	450772	1	SNAP RING, support retaining
0837-26	450354	1	LEVER, trans. parking lock gear operating
0837-28	450477	1	PIN, lever 1/8" x 7/8"
0837-32	450849	1	SPRING, trans. parking lock gear operating lever
	6480750	1	PIN, trans. parking lock gear operating lever stop

0841B - TRANSMISSION OIL COOLER (Plate 08-9)

0841-1	1540008	1	PIPE w/NUTS, inlet, oil cooler
0841-5	1540007	1	PIPE w/NUTS, outlet, oil cooler (trans. end)
0841-7	1540009	1	PIPE w/NUTS, outlet, oil cooler (radiator end)
	g137398	6	NUT, inverted flare 5/16"
0841-12	535284	2	COUPLING, flexible, oil cooler pipes
0841-14	g116341	1	ELBOW, oil cooler inlet pipe to radiator
0841-16	g137422	1	ELBOW, oil cooler outlet pipe to radiator
0841-18	g137414	1	UNION, oiler cooler outlet pipe
0841-20	g137406	2	ADAPTER, oiler cooler pipes to trans.
0841-24	1539975	2	CLIP, oil cooler pipe to engine pan
	g120368	2	NUT, to oil pan stud hex. 5/16" - 24"
	g120214	2	WASHER, lock 5/16"
0841-25	172653	1	CLIP, oiler cooler outlet pipe to radiator
	- - - -	1	BOLT, fastening 1/4" - 28 x 1/2"
	g120367	1	NUT, hex. 1/4" - 28"
	g120380	1	WASHER, lock 1/4"

ILLUST. NUMBER	PART NUMBER	PER CAR	DESCRIPTION
0847B - TRANSMISSION UNIVERSAL JOINT FLANGE (Plate 08-9)			
0847-1	6480529	1	FLANGE, universal joint
0847-2	g100027	1	SCREW, to output shaft 3/8" - 24 x 1-1/4"
	g120382	1	WASHER, lock 3/8"
0847-4	450819	1	RETAINER, washer
0850B - HAND CONTROL SELECTOR LEVER, SHAFT AND INDICATOR (Plate 08-16)			
0850-1	532996p	1	LEVER, selector
0850-4	532886	1	PIN, pivot 1" long
0850-14	532551	1	GROMMET, selector lever - rubber
0850-20	533343x3	1	KNOB, selector lever
0850-31	534093p	1	SUPPORT, selector lever
0850-33	532545	1	WASHER, spring 1-1/2" I.D.
0850-45	1539825	1	SHAFT, selector lever tubular
0850-48	1539830	1	LEVER w/GREASE FITTING, selector shaft
	- - - -	1	GREASE FITTING, alemite straight
0850-52	1539832	1	BRACKET w/BEARING, selector shaft upper (less power steering)
0850-52	1539833	1	BRACKET w/BEARING, selector shaft upper (with power steering)
0850-56	532549	2	BOLT, anchor, to jacket (special)
	532550	2	NUT, special 1/4" - 28
(1305-10)	- - - -	1	BEARING, steering post (see Group 1305)
0850-75	1539769	1	DIAL, selector indicator
	- - - -	2	SCREW, to bracket No. 6 - 32 x 5/16"
0850-79	533329	1	HOUSING, selector indicator lamp
	- - - -	2	SCREW, to lever support No. 6 - 32 x 7/16"
0850-83	533271	1	SOCKET and CABLE, selector indicator lamp
	2068x1	1	SCREW, to lever support
0850-86	531435	1	CABLE and TERMINALS, selector indicator lamp
0850-94	g131282	1	BULB, selector indicator lamp
0853B - HAND CONTROL STARTER CUT-OUT AND BACK-UP LAMP SWITCH (Plate 08-16)			
0853-1	1540309	1	SWITCH, starter cut-out and back-up lamp
	g451790	2	SCREW, to jacket No. 10 - 16 x 3/8"
0853-8	1540308	1	ROD, starter cut-out and back-up lamp switch
	- - - -	1	COTTER, 1/16" x 1/2"
0854B - HAND CONTROL RODS AND BELL CRANK (Plate 08-16)			
0854-1	1541423	1	ROD, shaft lever to bell crank control
0854-6	192057	1	WASHER, spring 25/64"
	g120394	1	WASHER, plain 3/8"
	- - - -	1	COTTER 3/32" x 1"
0854-8	519533	1	CLEVIS, control rod
	g120369	1	NUT, lock 3/8" - 24
0854-12	192057	1	WASHER, spring 25/64"
	42x44	1	PIN, clevis 3/8" x 7/8"
	- - - -	1	COTTER, 3/32" x 1"
0854-19	1539845	1	BELL CRANK, control rod (incl. bushings and grease fitting)
	- - - -	1	GREASE FITTING - alemite - straight
0854-20	426719	2	RING, retaining
0854-21	6202056	2	WASHER, spring
0854-22	6232159	2	WASHER, plain

ILLUST. NUMBER	PART NUMBER	PER CAR	DESCRIPTION
0854-23	465078	1	SHAFT, control rod bell crank
0854-24	426709	2	BUSHING, control rod bell crank shaft
0854-25	433181	2	RETAINER, bell crank shaft bushing
0854-26	426710	2	CLAMP, bell crank shaft bushing
	g181003	4	BOLT, to bracket 1/4" - 28 x 5/8"
	g120367	4	NUT, hex. 1/4" - 28
	g120380	4	WASHER, lock 1/4"
0854-26-1	1539850	1	BRACKET, bell crank shaft inner support
	- - - -	1	SCREW, upper fastening 1/2" - 20 x 1-1/16"
	- - - -	1	SCREW, lower fastening 1/2" - 20 x 1"
	- - - -	2	WASHER, lock 1/2"
0854-26-2	1539851	1	BRACKET, bell crank shaft outer support for fastening parts see - second cross member and pedal shaft retainer bolt
0854-27	1539852	1	ROD, bell crank to trans.
0854-29	184526	1	WASHER, spring
	g120392	2	WASHER, plain 9/32"
	- - - -	2	COTTER 1/16" x 3/4"

* - Use as required
▲ - Not available

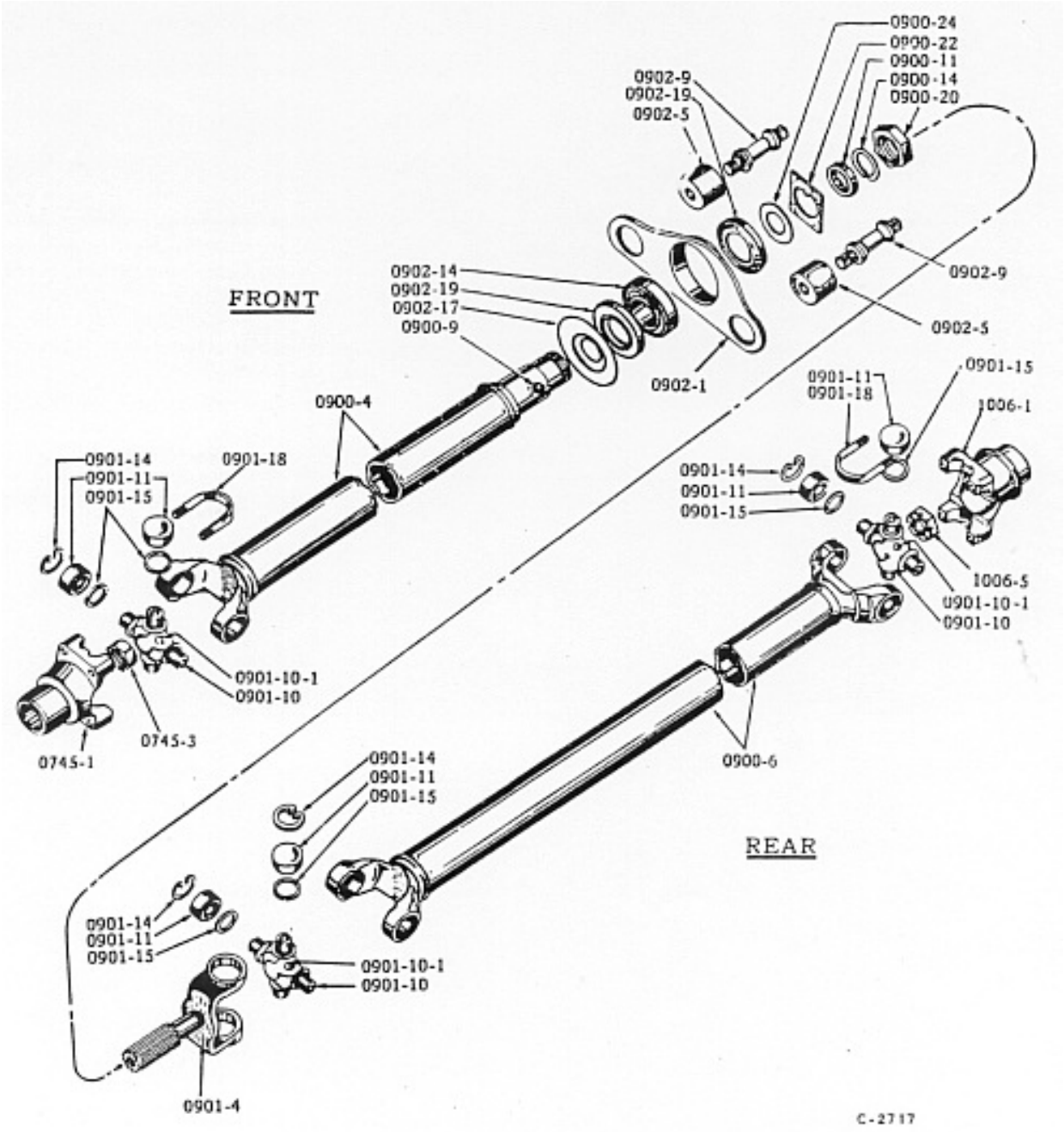

PROPELLER SHAFT, UNIVERSAL JOINTS AND SUPPORT—All 55, 56, 57

ILLUST. NUMBER	PART NUMBER	PER CAR	DESCRIPTION	

0900 - PROPELLER SHAFT

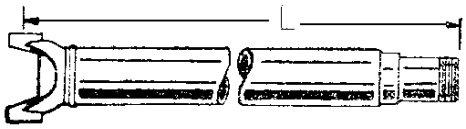

FRONT

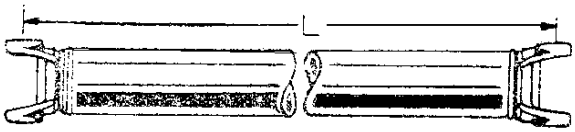

REAR

C-2702

			Front shafts	**Length**
	1541746	1	SHAFT and JOINT	15-15/16"
			Rear Shafts	
	535461	1	SHAFT and JOINTS - C-K-Y	42-15/16"
0900-4	▲- - - -	1	SHAFT and YOKE, front (see shaft and joint)	
0900-6	▲- - - -	1	SHAFT and YOKES, rear (see shaft and joints)	
0900-9	g271287	1	GREASE FITTING, shaft sleeve	
0900-11	522053	1	WASHER, shaft sleeve grease	
0900-14	522054	1	RETAINER, shaft grease washer	
0900-20	522051	1	NUT, shaft sleeve grease washer or cap	
0900-22	522052	1	LOCK PLATE, nut	
0900-24	527024	1	SPACER, lock plate	

▲ - Not available

ILLUST. NUMBER	PART NUMBER	PER CAR	DESCRIPTION

0901 - UNIVERSAL JOINT (Plate 09-1)

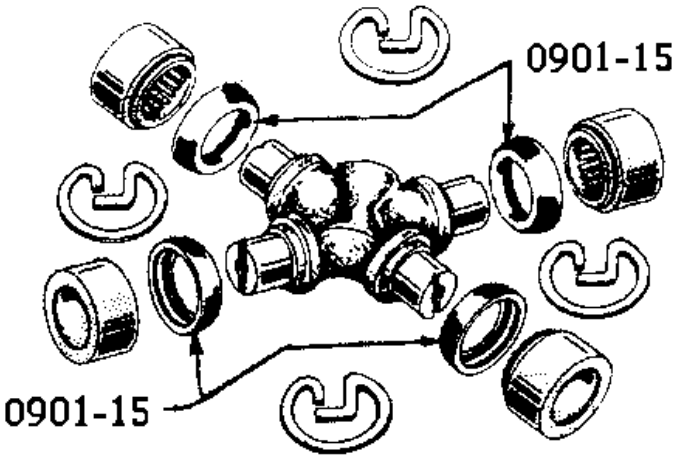

0901-4	526944	1	YOKE, universal joint slip
			Cross and Bearing Unit
	1541448	*	CROSS and BEARING UNIT, universal joint - consists of: 1 - cross, 4 - bearings, 4 - snap rings and 4 - seals
0901-10	▲- - - -	*	CROSS, universal joint (furnished only in unit)
0901-10-1	g271287	*	GREASE FITTINGS, cross
0901-11	▲- - - -	*	BEARING, universal joint cross (furnished only in unit)
0901-14	182540	*	SNAP RING, universal joint cross bearing
0901-15	1541451	*	SEAL, universal joint cross bearing - rubber
0901-18	187425	*	CLIP, universal joint cross bearing
	g120368	*	NUT, to flange 5/16" - 24
	g120214	*	WASHER, lock 5/16"
	- - - -	1	FLANGE, trans. universal joint, see groups 0745 - 0847
	- - - -	1	FLANGE, rear axle universal joint, see group 1006

0902 - PROPELLER SHAFT SUPPORT (Plate 09-1)

0902-1	532009	1	SUPPORT, shaft
0902-5	519175	2	CUSHION, shaft support
0902-9	524184	2	STUD, to frame 3/8" - 24 x 2-3/16"
	g120369	4	NUT, hex. 3/8" - 24
	- - - -	2	WASHER, plain 3/8"
	g120382	4	WASHER, lock 3/8"
0902-14	664443	1	BEARING, shaft support
0902-17	530421	1	DUST SHIELD, outer, support bearing
0902-19	531016	2	DUST SHIELD, inner, support bearing

* - Use as required
▲ - Not available

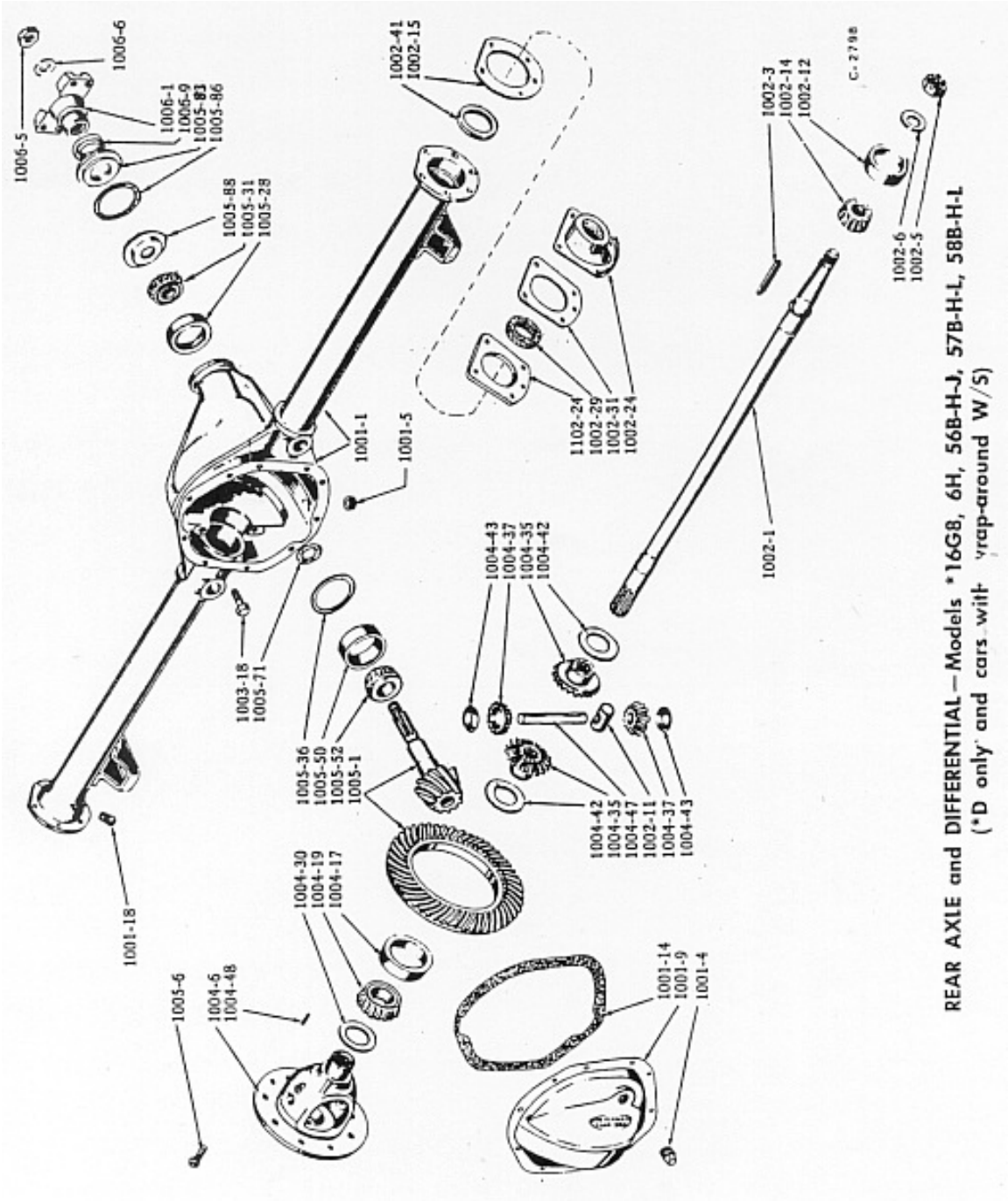

REAR AXLE and DIFFERENTIAL—Models *16G8, 6H, 56B-H-J, 57B-H-L, 58B-H-L
(*D only and cars with Wrap-around W/S)

ILLUST. NUMBER	PART NUMBER	PER CAR	DESCRIPTION	
1000 - REAR AXLE ASSEMBLIES (Plate 10-2)				
			Rear axle assemblies are furnished complete with universal joint flange, but are less brake backing plates and brake shoes.	
				ratio
	1541327	1	AXLE ASSY., rear-w/OD	3.92
	1541323	1	AXLE ASSY., rear-w/AD	3.07
	1541325	1	AXLE ASSY., rear-w/OD	3.54
	1541326	1	AXLE ASSY., rear-w/OD	3.73
	1541328	1	AXLE ASSY., rear-w/OD	4.09
	1541329	1	AXLE ASSY., rear-w/OD	4.27
	1541330	1	AXLE ASSY., rear-w/OD	4.55
1001 - REAR AXLE HOUSING (Plate 10-2)				
			Rear axle housings are furnished less brake backing plates and brake shoes.	
1001-1	532665	1	HOUSING, w/CARRIER ASSY., R/A	
1001-4	g103869	1	PLUG, filler, square head 3/4" pipe	
1001-5	g143999	1	PLUG, drain, countersunk head 3/4" pipe	
1001-9	530600	1	COVER, R/A housing	
	512709	9	SCREW, short 5/16" - 18 x 3/4"	
	g180078	1	SCREW, long 5/16" - 18 x 7/8"	
	g120214	10	WASHER, lock 5/16"	
1001-14	530570	1	GASKET, R/A housing cover-paper	
1001-18	g103883	2	GREASE PLUG, R/A shaft bearing 1/8" pipe	
1002 - REAR AXLE SHAFT and BEARINGS (Plate 10-2)				
1002-1	1540835	2	SHAFT, R/A	
1002-3	1540834	2	KEY, shaft to hub 1/4" x 3"	
1002-5	510516	2	NUT, shaft to hub 7/8" - 14	
1002-6	510518	2	WASHER, plain 29-32"	
	- - - -	2	COTTER, 1/8" x 1-1/2"	
1002-11	530706	1	THRUST BLOCK, R/A shaft (w/std. diff) (incl. in 530705 kit)	
1002-12	165167	2	CUP, R/A shaft bearing	
1002-14	530451	2	CONE and ROLLERS, R/A shaft bearing	
				Thickness
1002-15	194844	*	SHIM, R/A shaft bearing adjusting	.005
1002-15	194845	*	SHIM, R/A shaft bearing adjusting	.010
1002-15	194846	*	SHIM, R/A shaft bearing adjusting	.030
1002-15	1539920	*	SHIM, R/A shaft bearing adjusting	.057-.063
1002-24	533161	2	WASHER and RETAINER, outer, R/A shaft bearing oil seal/or	
1002-29	197216	2	WASHER, outer - R/A shaft bearing oil-felt	
1002-31	197436	4	GASKET, R/A shaft outer retainer and reinforcement plate-paper	
1002-41	530573	2	OIL SEAL, inner - R/A shaft-leather	
1003 - DIFFERENTIAL CARRIER (Plate 10-2)				
	- - - -	1	CARRIER, differential-integral with axle housing	
1003-18	g179890	4	SCREW, differential carrier bearing cap 1/2" - 13 x 2-1/4"	

ILLUST. NUMBER	PART NUMBER	PER CAR	DESCRIPTION

1004 - DIFFERENTIAL CASE AND BEARINGS (Plate 10-2)

1004-6	530702	1	CASE, diff w/std. diff. ratios 3.92,4.09,4.27,4.55	
1004-6	530703	1	CASE, diff w/std. diff. ratios 3.07,3.31,3.54,3.73	
1004-17	190047	2	CUP, diff. bearing	
1004-19	190048	2	CONE and ROLLERS, diff. bearing	
				Thickness
1004-30	510717	*	SHIM, diff. bearing adjusting	.003
1004-30	510718	*	SHIM, diff. bearing adjusting	.005
1004-30	510719	*	SHIM, diff. bearing adjusting	.010
1004-30	510720	*	SHIM, diff. bearing adjusting	.030
	530705	1	GEAR and PINION KIT, diff. side bevel (w/std. diff.)	
			530705 kit consists of:	
			2__ - - - pinion 1__530706 thrust block	
			2__ - - - gear 1__510721 shaft	
			2__511678 thrust washer 1__510722 pin	
			2__511679 thrust washer	
1004-35	- - - -	2	GEAR, diff. side bevel (w/std. diff.) (furnished only in 530705 kit)	
1004-37	- - - -	2	PINION, diff. (w/std. diff.) (furnished only in 530705 kit)	
1004-42	511678	2	THRUST WASHER, side bevel gear (w/std. diff. (incl. in kit 530705)	
1004-43	511679	2	THRUST WASHER, diff. pinion (w/std. diff.) (incl. in kit 530705)	
1004-47	510721	1	SHAFT, diff. pinion (w/std. diff.) (incl. in kit 530705)	
1004-48	510722	1	PIN, diff. pinion shaft locking (w std. diff.) (incl. in kit 530705)	

1005 - REAR AXLE BEVEL DRIVE GEAR, PINION and BEARINGS (Plate 10-2)

The ratio marking is stamped on each gear and pinion. To insure more satisfactory performance only matched gears and pinions are furnished

				ratio
1005-1	536495	1	GEAR and PINION, R/A - w/OD	3.92
1005-1	537876	1	GEAR and PINION, R/A - w/AD	3.07
1005-1	530569	1	GEAR and PINION, R/A - w/OD	3.54
1005-1	537634	1	GEAR and PINION, R/A - w/OD	3.73
1005-1	530496	1	GEAR and PINION, R/A - w/OD	4.09
1005-1	535391	1	GEAR and PINION, R/A - w/OD	4.27
1005-1	531156	1	GEAR and PINION, R/A - w/OD	4.55
1005-6	527171	*	SCREW, to case 3/8"-24 x 15/16"	
1005-28	190032	1	CUP, front, R/A pinion bearing	
1005-31	190033	1	CONE and ROLLERS, front - R/A - pinion bearing	
				thickness
1005-36	511652	*	SHIM, R/A - pinion adjusting	.003
1005-36	511653	*	SHIM, R/A - pinion adjusting	.005
1005-36	511654	*	SHIM, R/A - pinion adjusting	.010
1005-50	190035	1	CUP, rear, R/A - pinion bearing	
1005-52	190036	1	CONE and ROLLERS, rear - R/A pinion bearing	
1005-71	190038	*	SHIM, R/A - pinion bearing adjusting	.003
1005-71	190039	*	SHIM, R/A - pinion bearing adjusting	.005
1005-71	190040	*	SHIM, R/A - pinion bearing adjusting	.010
1005-71	190041	*	SHIM, R/A - pinion bearing adjusting	.030
1005-83	199379	1	OIL SEAL, R/A pinion bearing-leather	
1005-86	184161	1	GASKET, R/A pinion bearing oil seal - paper	
1005-88	537678	1	SLINGER, R/A pinion bearing oil	

ILLUST. NUMBER	PART NUMBER	PER CAR	DESCRIPTION
1006 - REAR AXLE UNIVERSAL JOINT FLANGE (Plate 10-2)			
1006-1	521825	1	FLANGE w/COVER, R/A universal joint
1006-5	527432	1	NUT, to pinion hex. 3/4" - 16
1006-6	196965	1	WASHER, plain 25/32"
1006-9	510934	1	COVER, R/A universal joint flange dust

* - Use as required
▲ - Not available

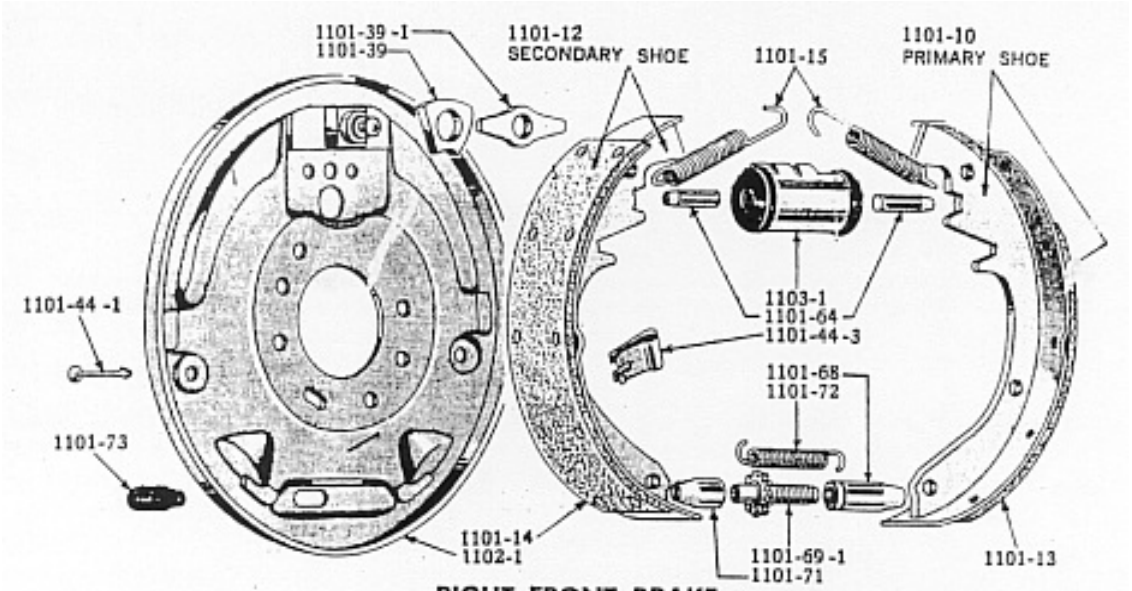

RIGHT FRONT BRAKE
Models 16G8, 6H, 56B-H-J, 57B-H-L, 58B-H-L
(56G, 57G, 58G, HD—police cars and taxi cabs)

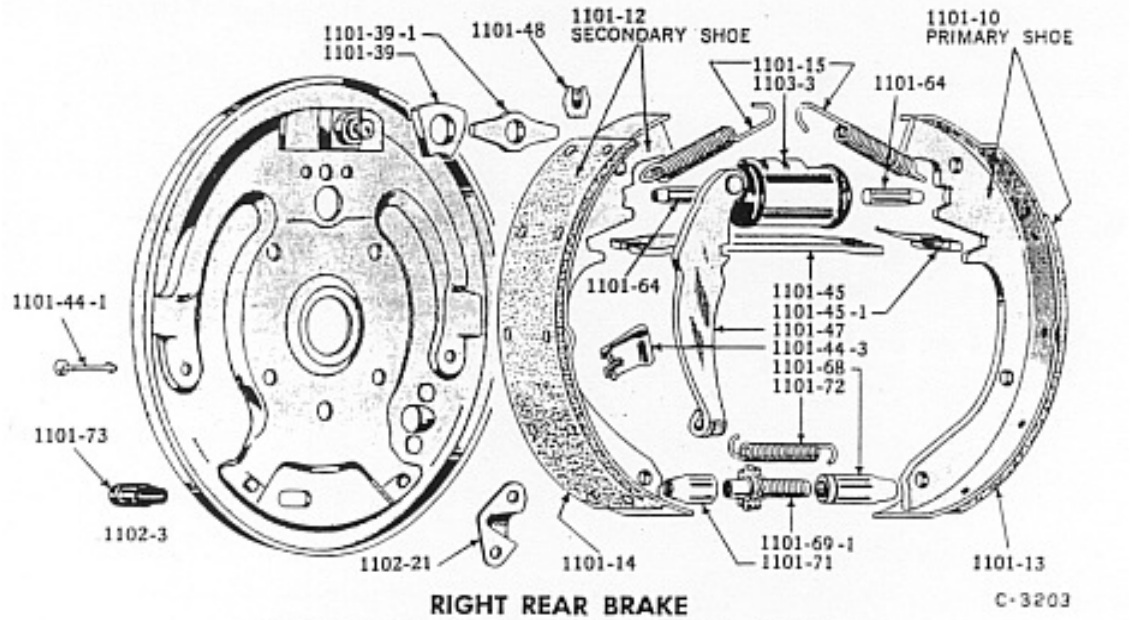

RIGHT REAR BRAKE
Models 16G8, 6H, 56B-H-J, 57B-H-L, 58B-H-L
(56G, 57G, 58G, HD—police cars and taxi cabs)

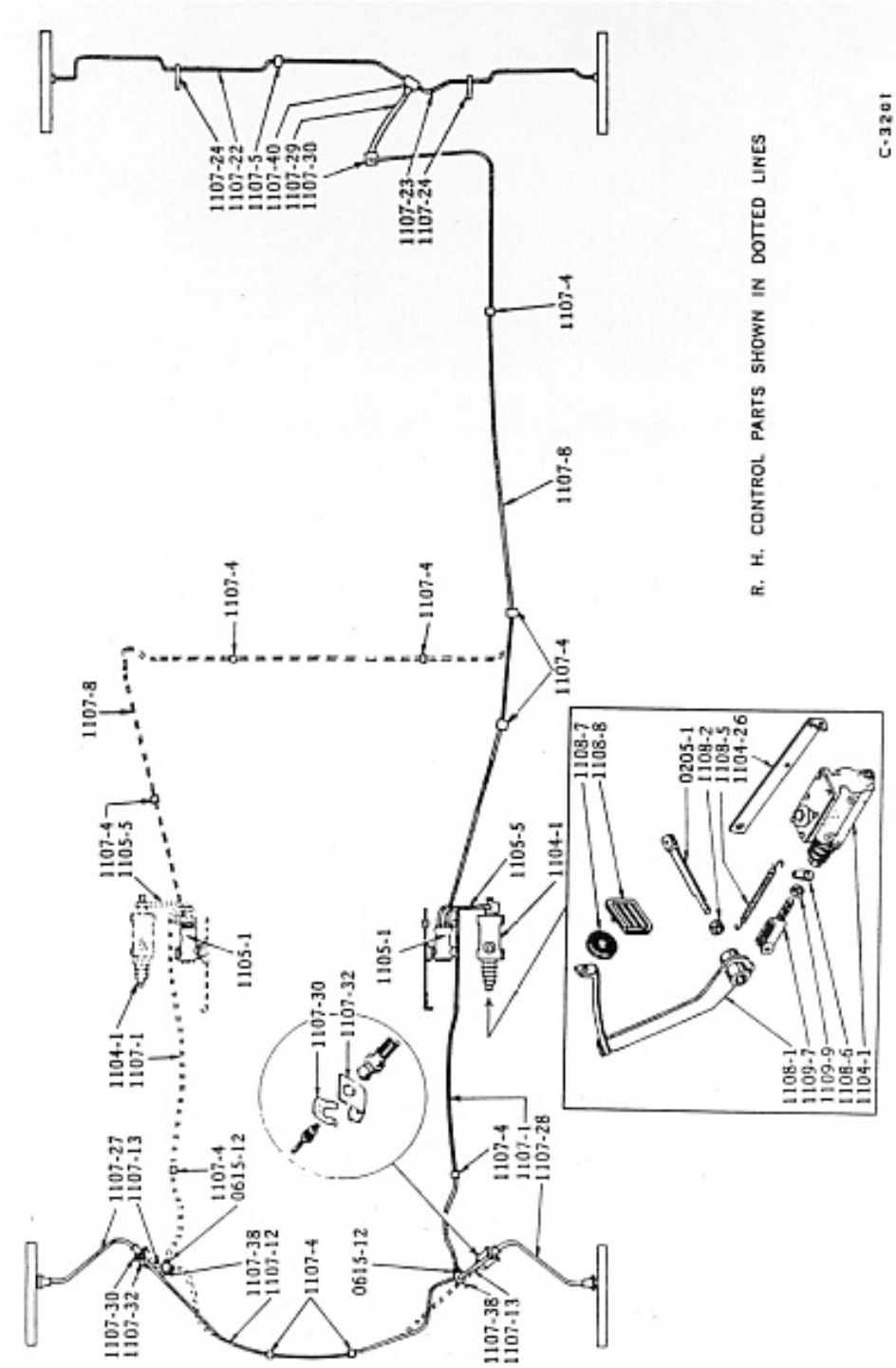

TYPICAL BRAKE PEDAL, PIPES, HOSE and FITTINGS—For Cars With ST. and OD.
(Less Power Brakes)

TYPICAL BRAKE PEDAL, PIPES, HOSE and FITTINGS - For CARS WITH AD Plate 11-4
(Less Power Breaks) From page 358 - Chassis Parts Manual

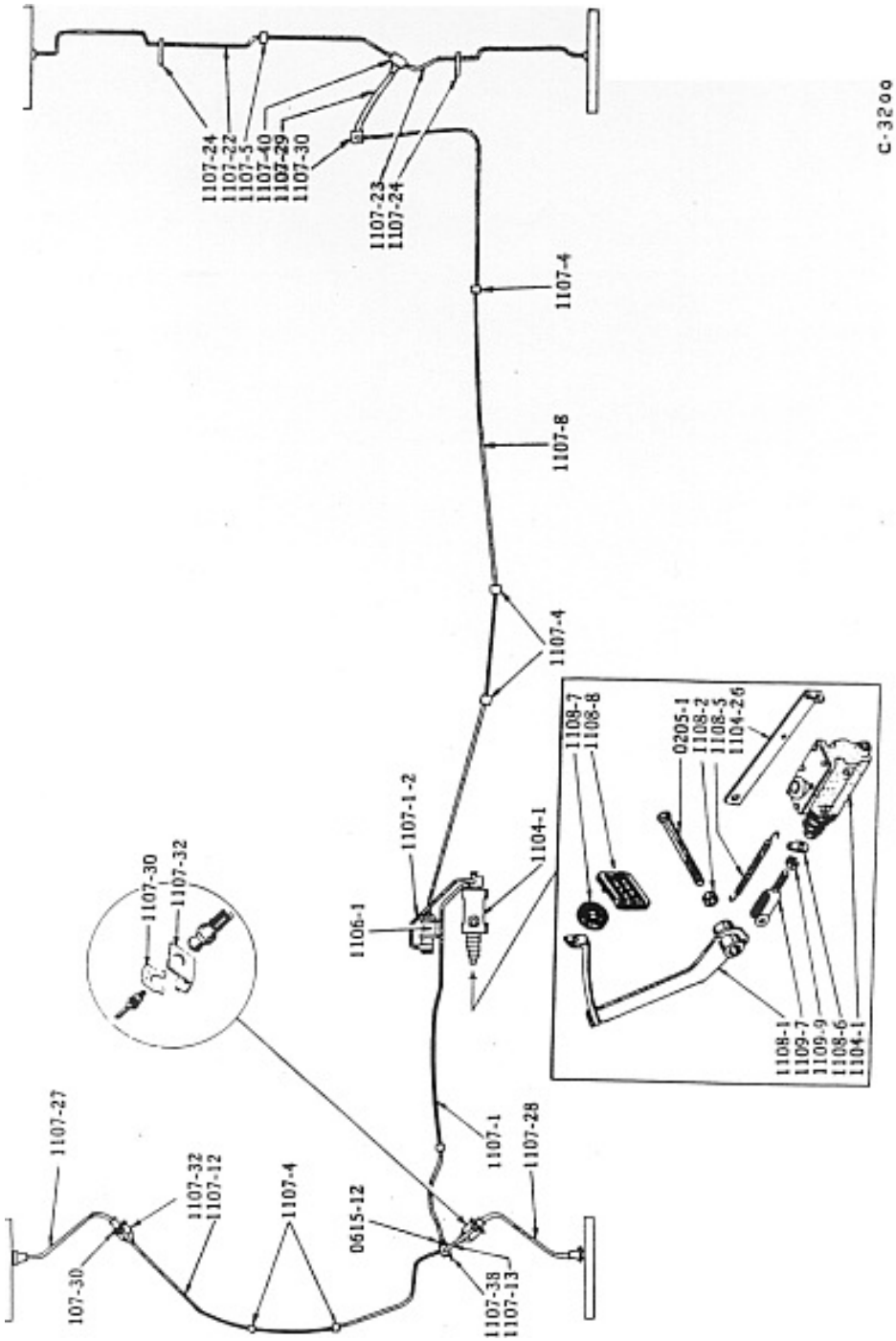

TYPICAL BRAKE PEDAL, PIPES, HOSE and FITTINGS For Cars With AD.
(Less Power Brakes)

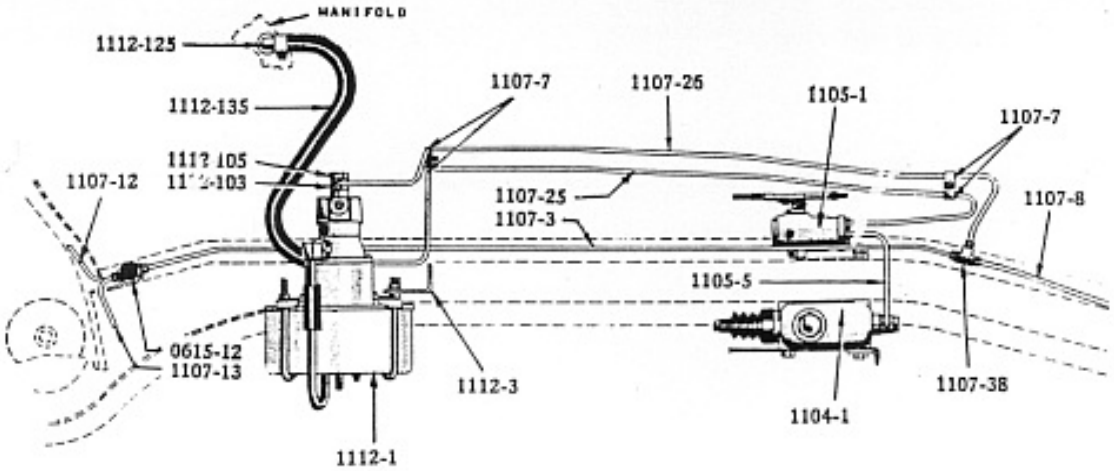

BODY SYMBOLS W-Y-F-D-P-J

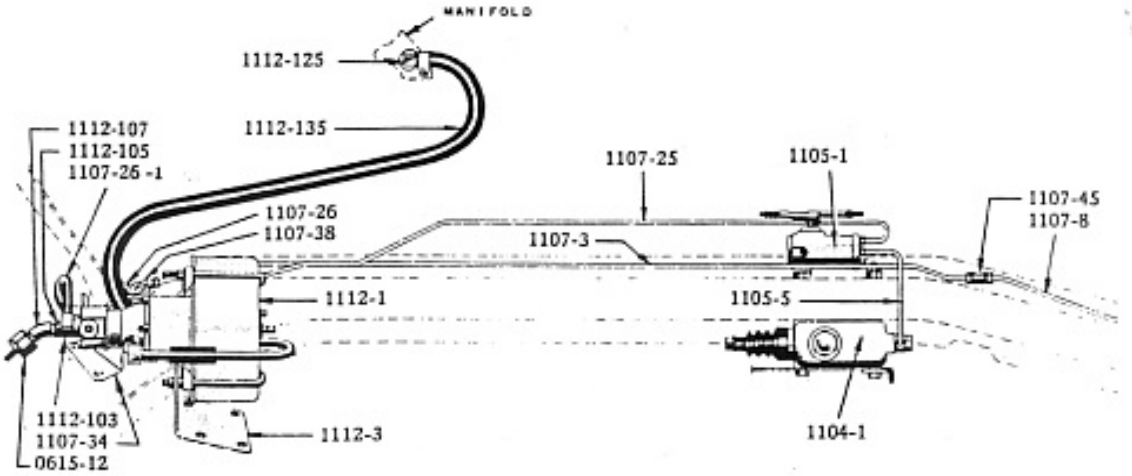

BODY SYMBOLS -C-K C-3218

TYPICAL BRAKE PIPES, HOSE and FITTINGS—Models 16G8, 6H, 56B-H-J, 57B-H-L, 58B-H-L
For Cars With ST. and OD. (With Power Brakes)

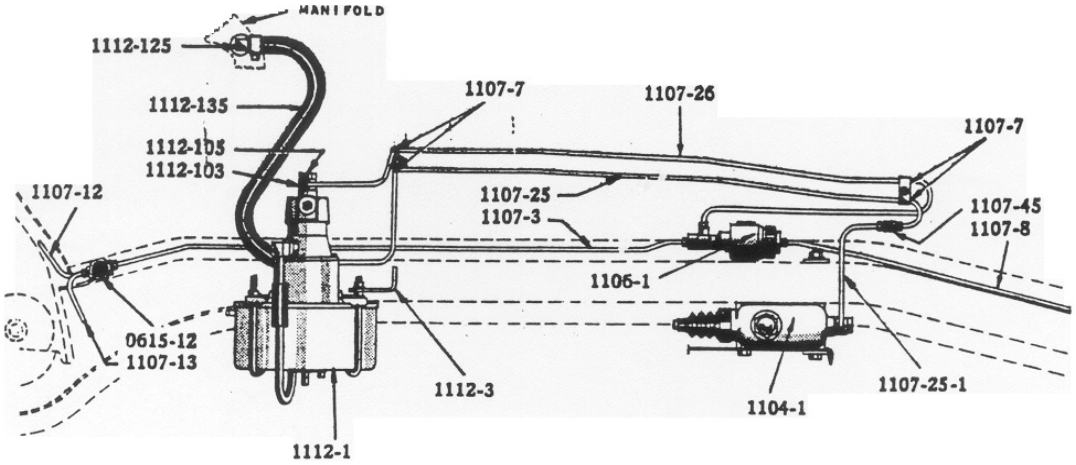

BODY SYMBOLS W-Y-F-D-P-J

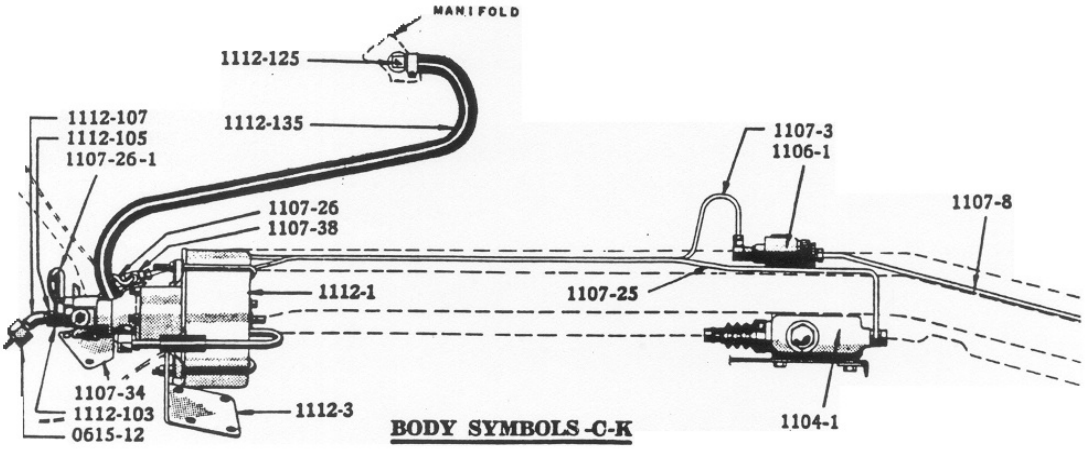

TYPICAL BRAKE PIPES, HOSE and FITTINGS—Models 16G8, 6H, 56B-H-J, 57B-H-L, 58B-H-L For Cars With AD. (With Power Brakes)

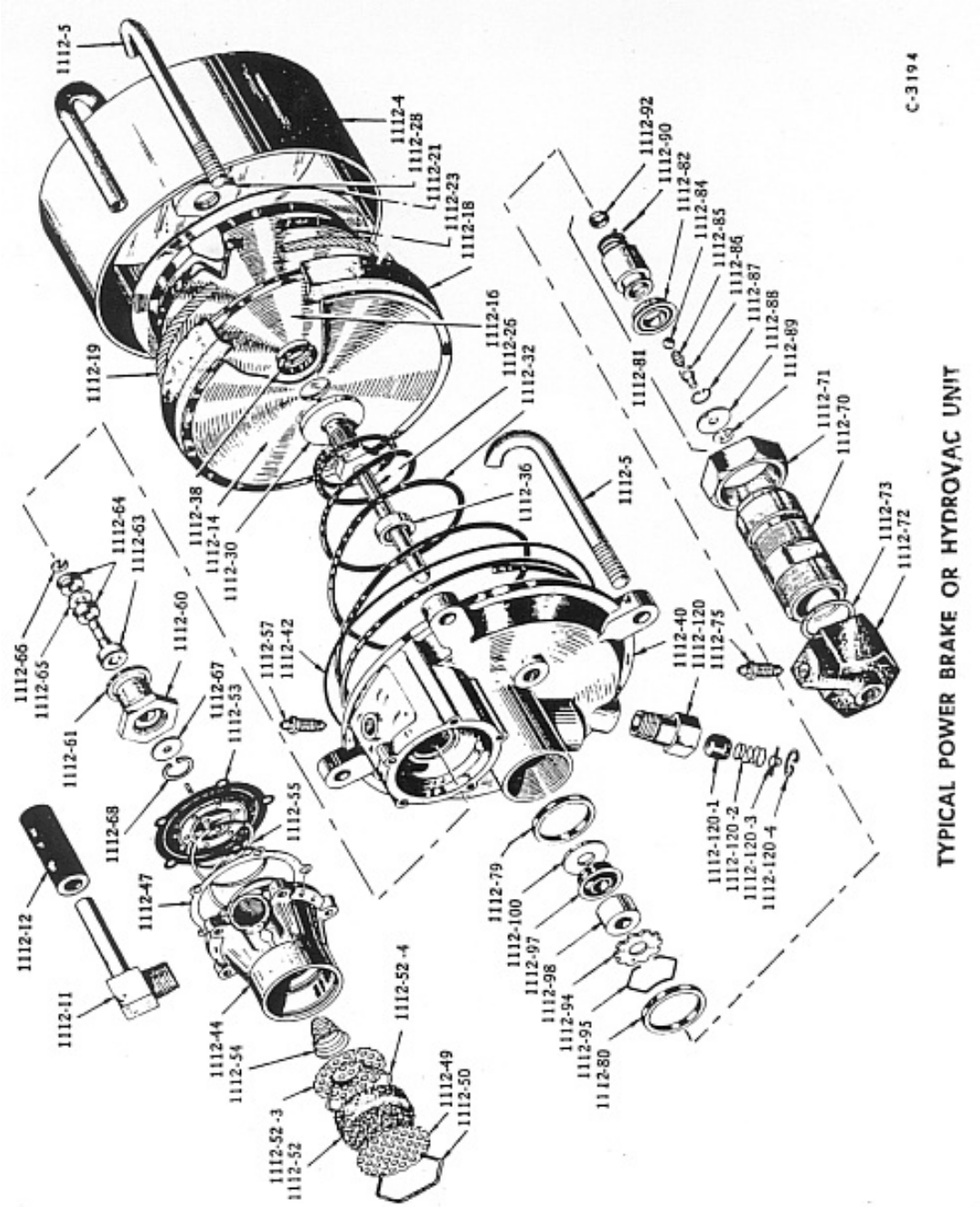
1112-5
1112-4
1112-28
1112-21
1112-23
1112-18
1112-19
1112-16
1112-26
1112-32
1112-38
1112-14
1112-30
1112-36
1112-5
1112-92
1112-90
1112-82
1112-84
1112-85
1112-86
1112-87
1112-88
1112-89
1112-81
1112-71
1112-70
1112-73
1112-72
1112-64
1112-63
1112-66
1112-65
1112-60
1112-61
1112-67
1112-53
1112-57
1112-42
1112-40
1112-120
1112-75
1112-68
1112-55
1112-47
1112-12
1112-11
1112-44
1112-54
1112-52-4
1112-52-3
1112-52
1112-49
1112-50
1112-79
1112-100
1112-97
1112-98
1112-94
1112-95
1112-80
1112-120-1
1112-120-2
1112-120-3
1112-120-4
C-3194
TYPICAL POWER BRAKE OR HYDROVAC UNIT

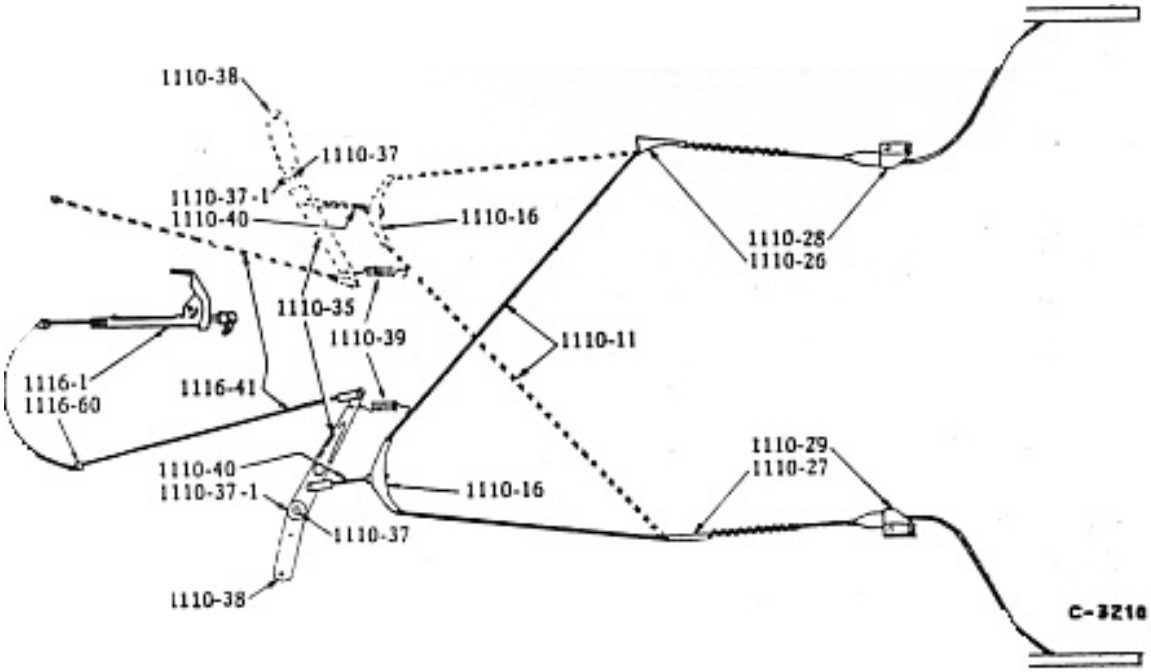
1110-38
1110-37
1110-37-1
1110-40
1110-16
1110-28
1110-26
1110-35
1110-39
1110-11
1116-1
1116-60
1116-41
1110-29
1110-27
1110-40
1110-37-1
1110-16
1110-37
1110-38
C-3210

HAND BRAKE

ILLUST. NUMBER	PART NUMBER	PER CAR	DESCRIPTION	

1101 - WHEEL BRAKE SHOES, LININGS, ETC. (Plate 11-2)

To insure satisfactory performance, brake shoes and/or linings must be installed in axle sets.

Brake Shoes

Lining riveted to shoe.

1101-10	535177	2	SHOE w/LINING, primary, front brake	U.S.A.
1101-12	536547	2	SHOE w/LINING, secondary, front brake	U.S.A.
1101-10,12	535148	4	SHOE w/LINING, rear brake	U.S.A.

Lining bonded to shoe. (Marshall Eclipse) heavy duty

1101-10	1546683	2	SHOE and LINING, primary, front brake
1101-12	1546684	2	SHOE and LINING, secondary, front brake
1101-10	1546685	2	SHOE and LINING, primary, rear brake
1101-12	1546686	2	SHOE and LINING, secondary, rear brake
	1546774	1	SHOE and LINING SET, front brakes - consists of: 2 -1546683 primary shoe and lining 2 - 1546684 secondary shoe and lining
	1546775	1	SHOE and LINING SET, rear brakes - consists of: 2 - 1546685 primary shoe and lining 2 - 1546686 secondary shoe and lining

Brake Shoe and Linings

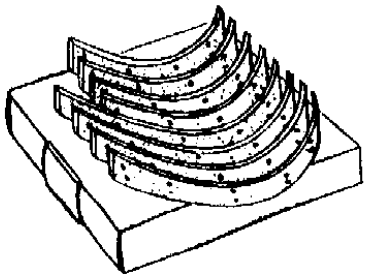

C-2472

	536733	1	LINING SET, brake shoe U.S.A. - consists of: 2 - 535188 Lining, primary shoe, front 2 - 536731 Lining, secondary shoe, front 4 - 535149 Lining, rear	
1101-13	- - - -	4	LINING, primary shoe (See Lining or Shoe Sets)	
1101-14	- - - -	4	LINING, secondary shoe (See Lining or Shoe Sets)	
	513266	80	RIVET, brake lining 9/64" x 5/16"	
				Free length
1101-15	535160	8	SPRING, brake shoe return (painted green)	3-57/64"
1101-39	535146	4	BLOCK, brake shoe anchor	
1101-39-1	535147	4	PLATE, brake shoe anchor	
1101-44-1	535158	8	PIN, brake shoe guide	
1101-44-3	535159	8	CLIP, spring, brake shoe guide	
1101-45	521566	2	LINK, rear brake shoe operating	
1101-45-1	535157	2	SPRING, anti-rattle	
1101-47	535190	1	LEVER and PIN, right rear link operating	
	535191	1	LEVER and PIN, left rear link operating	
1101-48	524031	2	WASHER, spring, special retaining	
1101-64	535162	8	PUSH ROD, brake shoe operating	

ILLUST. NUMBER	PART NUMBER	PER CAR	DESCRIPTION
1101-68	535164	4	NUT, brake shoe adjusting screw
1101-69-1	535165	4	SCREW, brake shoe adjusting
1101-71	535166	4	GUIDE, brake shoe adjusting screw
1101-72	535167	4	SPRING, brake shoe adjusting screw
1101-73	535168	4	PLUG, brake shoe adjusting screw backing plate

1102 - WHEEL BRAKE BACKING PLATES (Plate 11-2)

1102-1	535178	1	PLATE, right front brake backing
	535179	1	PLATE, left front brake backing
1102-3	535182	1	PLATE, right rear brake backing - Parking brake cable bracket fastened to backing plate with weld bolts.
	535183	1	PLATE, left rear brake backing - Parking brake cable bracket fastened to backing plate with weld bolts.
	519379	12	BOLT, to knuckle 3/8" - 24 x 7/8"
	196324	*	BOLT, to housing 3/8" - 24 x 1"
	g120369	*	NUT, hex. 3/8" - 24
	g120382	*	WASHER, lock 3/8"
1102-21	533056	1	BRACKET, right backing plate hand brake cable
	533057	1	BRACKET, left backing plate hand brake cable
	533907	4	BOLT, weld, backing plate 1/4" - 20 x 11/16" - Parking brake cable bracket fastened to backing plate with weld bolts.
	g120375	4	NUT, hex. 1/4" - 20 - Parking brake cable bracket fastened to backing plate with weld bolts.
	- - - -	4	WASHER, lock 1/4" - Parking brake cable bracket fastened to backing plate with weld bolts.
1102-24	519383	2	PLATE, rear backing plate reinforcing (illust. plate 10-2)

1103 - WHEEL BRAKE CYLINDER (Plate 11-2)

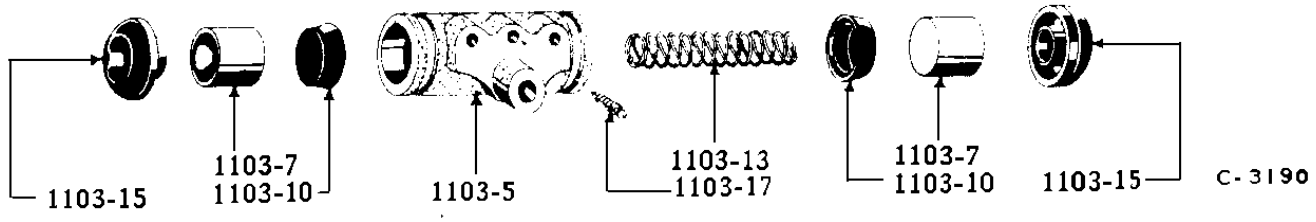

1-1/16" dia. front cylinder (Casting No. FD-18871) and 7/8" dia. rear cylinder (Casting No. FC-4664)

1103-1	535585	2	CYLINDER COMPLETE, front wheel	U.S.A.
1103-3	535586	2	CYLINDER COMPLETE, rear wheel	U.S.A.
1103-3	g121533	8	SCREW, to backing plate 1/4" - 20 x 7/16"	
	- - - -	8	WASHER, lock 1/4"	
1103-5	- - - -	4	CYLINDER CASTING, wheel (use cylinder complete)	

ILLUST. NUMBER	PART NUMBER	PER CAR	DESCRIPTION

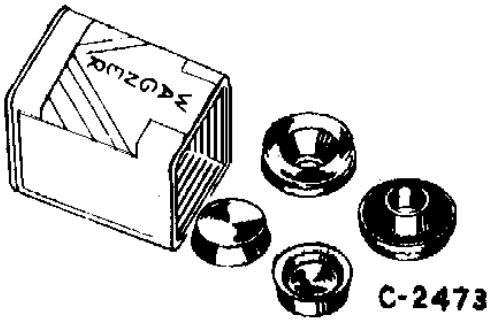

	535558	2	CYLINDER REPAIR KIT, front wheel U.S.A. - consists of: 2 - 663428 cup 2 - 535171 boot
	535559	2	CYLINDER REPAIR KIT, rear wheel U.S.A. - consists of: 2 - 197126 cup 2 - 535176 boot
1103-7	663429	4	PISTON, front wheel cyl. U.S.A.
1103-7	535482	4	PISTON, rear wheel cyl. U.S.A.

				Dia.	Incl. in kit
1103-10	663428	4	CUP, front wheel cyl. U.S.A.	1-1/16"	535558
1103-10	197126	4	CUP, rear wheel cyl. U.S.A.	55/64"	535559

(NOTE: Manual lists Incl. in kit 535557?)

1103-13	636765	2	SPRING, front wheel cyl. piston (11 2/3 coils)	U.S.A.
1103-13	636747	2	SPRING, rear wheel cyl. piston (11 coils)	U.S.A.
1103-15	535171	4	BOOT, front wheel brake cyl.	535558
1103-15	535176	4	BOOT, rear wheel brake cyl.	535559
1103-17	197097	4	FITTING, wheel brake cyl. bleeder 1/4" - 28 x 1"	

MASTER CYLINDER (M/C)

1104 - MASTER CYLINDER (M/C)

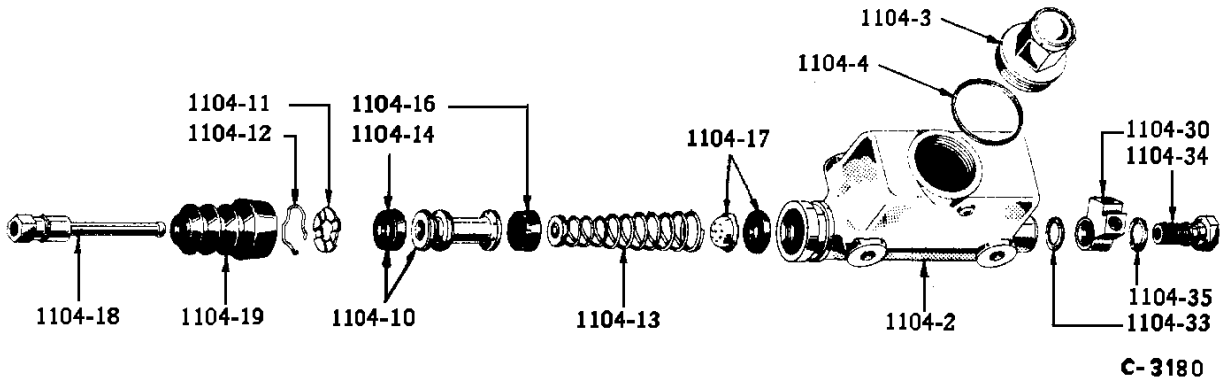

1104-1	531510	1	MASTER CYLINDER COMPLETE, less fitting and screw - U.S.A.
1104-2	- - - -	1	CYLINDER CASTING, MASTER (use cylinder complete)
1104-3	679927	1	PLUG, filler 1-5/8" - 18 U.S.A.

ILLUST. NUMBER	PART NUMBER	PER CAR	DESCRIPTION	
1104-4	196562	1	GASKET, 1-41/64" I.D. - fibre U.S.A.	
	g191637	2	BOLT, to frame 3/8" - 24 x 5-3/4" - w/OD.	
	g186318	2	BOLT, to frame 3/8" - 24 x 5-1/4" - w/AD.	
	g120369	2	NUT, hex. 3/8" - 24	
	41x548	*	WASHER, plain 13/32"	
	g138489	2	WASHER, shakeproof 3/8"	
				Incl. in kit
1104-10	523928	1	PISTON w/CUP, m/c - U.S.A.	523918
1104-11	531476	1	STOP, m/c piston	
1104-12	196555	1	LOCK WIRE	523918
1104-13	525031	1	SPRING w/RETAINER, m/c piston - U.S.A.	
1104-14	196551	1	CUP, m/c piston 1-1/16" dia. - rubber	
1104-16	196547	1	CUP, m/c 1-1/32" dia. rubber	523918
1104-17	531511	1	VALVE COMPLETE, m/c - U.S.A.	523918
1104-18	523924	1	LINK, m/c connecting - U.S.A.	
1104-19	523925	1	BOOT, m/c	523918
1104-26	531877	1	STRAP, m/c side support - LHC - less power brakes	
	536379	1	STRAP, m/c side support - LHC - w/power brakes	
1104-30	512770	1	FITTING, m/c outlet (with NoRol) (less AD.) - less power brakes	
1104-30	195470	1	FITTING, m/c outlet (AD.) less power brakes	
	512770	1	FITTING, m/c outlet - LHC - w/power brakes	
1104-33	185165	1	GASKET, fitting 33/64" - copper	AC-2406
1104-34	189696	1	SCREW, to m/c 1/2" - 20 x 1-5/32"	
1104-35	185164	1	GASKET, screw 39/64" - copper	AC-2406

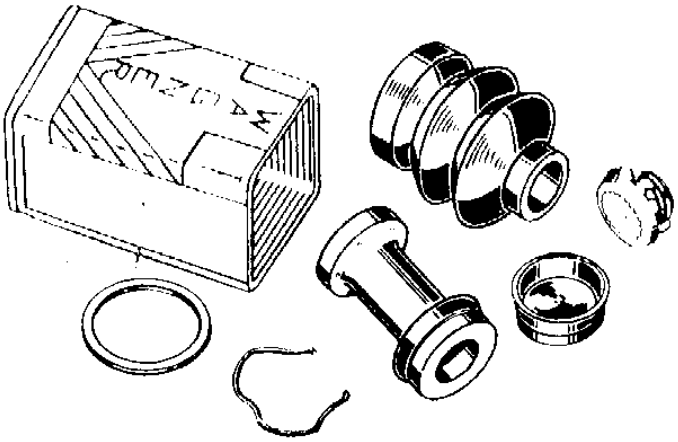

C-2474

	523918	1	MASTER CYLINDER REPAIR KIT - U.S.A. consists of: 1 - 523928 piston 1 - 196555 lock wire 1 - 196547 cup 1 - 523925 boot 1 - 531511 valve & seat
	SP-50067	*	HYDRAULIC BRAKE FLUID - pint
	SP-50068	*	HYDRAULIC BRAKE FLUID - gallon
	SP-50069	*	HYDRAULIC BRAKE FLUID - 5 gallon

ILLUST. NUMBER	PART NUMBER	PER CAR	DESCRIPTION

NoRoL UNIT

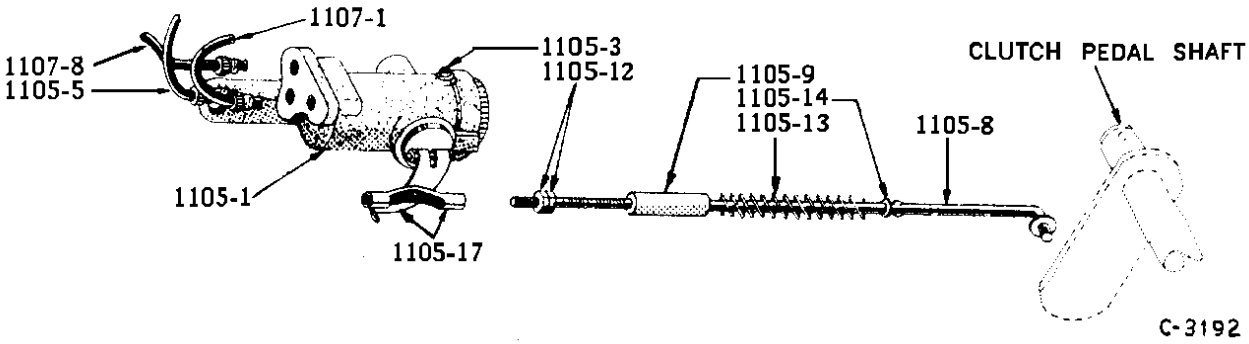

1105 - NoRol UNIT

NOTE: - Items listed are for cars with std. and OD. transmissions

	AC-2406	1	NoRol EQUIPMENT - LHC - consists of: 1 - 532252 valve w/lever 1 - 188324 washer 1 - 531986 rod 1 - 185164 washer 1 - g120391 washer 1 - 185165 washer 1 - - - - - cotter 1 - 532568 pipe w/nuts 1 - 188323 sleeve 1 - 188322 spring 2 - g120614 nut 1 - 512770 fitting	
				Incl. in kit
1105-1	532252	1	VALVE w/LEVER, NoRol-LHC	AC-2406
	- - - -	1	SCREW, bleeder hole No. 10 - 32 x 1/4"	
	187322	1	GASKET, 13/64" - copper	
	526633	1	NoRol REPAIR KIT - consists of: ball cage assy., head chamber gasket, cam shaft plug gasket, cam shaft sealing washer.	
1105-5	532568	1	PIPE w/NUTS, NoRol to m/c - LHC	AC-2406
	g137396	2	NUT, pipe 3/8" - 24	
1105-8	531986	1	ROD, NoRol valve operating - length 9-3/8"	AC-2406
1105-9	188323	1	SLEEVE, adjusting	AC-2406
(1105-12?)	g120614	2	NUT, locking No. 10 - 32	AC-2406
	g120391	1	WASHER, plain No. 10	AC-2406
	- - - -	1	COTTER, 1/16" x 1/2"	AC-2406
1105-13	188322	1	SPRING, NoRol valve operating rod (59 coils)	AC-2406
1105-14	188324	1	WASHER, stop No. 10	AC-2406
1105-17	533154	1	LEVER and GUIDE, NoRol valve - LHC	
	- - - -	1	SCREW, clamping No. 10 - 32 x 7/8"	
	g120614	1	NUT, hex. No. 10 - 32	
	- - - -	1	WASHER, lock No. 10	

ILLUST. NUMBER	PART NUMBER	PER CAR	DESCRIPTION	

1106 - ANTI-CREEP SOLENOID VALVE SWITCH AND CABLE (Plates 11-4, 8)

The ANTI-CREEP KIT shows a listing for the 56J, but other documentation suggests that it was not available on this model.

Parts in this group are for AD. cars only.

1106	AC-2770	1	ANTI-CREEP KIT (See page 375, Chassis Parts Manual)	
1106-1	1541266	1	SOLENOID VALVE, anti-creep	

1107 - BRAKE PIPES, HOSE AND FITTINGS (Plates 11-4, 7, 8)

Master Cylinder (M/C) to front Brake Pipes

				Developed Length
1107-1	1539768	1	PIPE /NUTS, NoRol to front tee - LHC (with NoRol, less AD. less power brakes)	40"
1107-1	1539770	1	PIPE w/NUTS, m/c or anti creep to front tee - LHC (with AD.) less power brakes	42-3/4"
	- - - -	1	PIPE w/NUTS, m/c to NoRol (see Group 1105)	
	g137404	1	NIPPLE, HYDROVAC to front brake pipe tee 3/8" - 1/8" - C-K	
1107-1-2	1541269	1	PIPE w/NUTS, m/c to anti-creep	6-3/4"
1107-3	1539771	1	PIPE w/NUTS, fitting to front tee (with power brakes)	40-3/4"
	195567	1	CLIP, to steer. gear	
	195567	*	CLIP, frame	
1107-4	(follows 1107-8 and 1107-13)			
1107-5	(follows 1107-24)			

Master Cylinder (M/C) to Rear Brake Pipe Hose

1107-8	532609	1	PIPE w/NUTS, NoRol to rear hose - LHC (with NoRol, less AD, less power brakes)	94-1/8"
1107-8	532674	1	PIPE w/NUTS, m/c or anti creep to rear hose - Y-H-K - LHC (with AD, less power brakes)	98-3/4"
1107-8	536568	1	PIPE w/NUTS, tee to rear hose - Y-C-K (with power brakes)	91"
1107-4	536840	3	CLIP, to frame	
	172651	1	CLIP, to frame	
	g177999	1	SCREW, to frame 1/4" x 1/2" (14 x 1/2"?)	

Front Brake Pipes (Tee to Hose)

1107-12	1541930	1	PIPE w/NUTS, long, tee to hose-LHC (check length before ordering)	40-11/16"
1107-13	1539783	1	PIPE w/NUTS, short, tee to hose-LHC (before SN 6032261)	5-1/4"
1107-13	1541931	1	PIPE w/NUTS, short, tee to hose-LHC (on and after SN 6032261)	6-7/16"
1107-4	194702	2	CLIP, to frame	

Rear Brake Pipes

1107-22	532641	1	PIPE w/NUTS, right, rear brake tee to brake	39-1/8"
1107-23	532654	1	PIPE w/NUTS, left, rear brake tee to brake	21-1/8"
1107-24	530186	2	CLIP, large, to axle housing	
1107-5	195567	1	CLIP, small, to axle housing	
	531013	1	SPACER, clip 3/16" thick (for 195567)	

ILLUST. NUMBER	PART NUMBER	PER CAR	DESCRIPTION	
			Master Cylinder (M/C) to Rear Power Brake Unit Pipes	
1107-25	536569	1	PIPE w/NUTS, M/C to HYDROVAC - C-K (less A.C.) less NoRol	55-1/2"
1107-25	536565	1	PIPE w/NUTS, NoRol to HYDROVAC - C-K (less A.C.)	51-1/4"
	195567	2	CLIP, to steer, gear - C-K	
			Power Brake Unit to Brake Tee Pipe	
1107-26	536564	1	PIPE w/NUTS, HYDROVAC to front pipe tee - C-K	14"
(1107-1)	g137404	1	NIPPLE, HYDROVAC to front brake pipe tee 3/8" - 1/8" - C-K	
1107-26-1 (follows 1107-29)				
			Brake Pipe Nuts	
	g137396	*	NUT, brake pipe 3/8" - 24	2 per pipe
			Brake Pipe Flexible Hose	**Overall Length**
1107-27,28	523614	2	HOSE, front, brake flexible (check length before ordering)	14-9/16"
1107-27,28	519637	2	HOSE, front, brake flexible (check length before ordering)	13-9/16"
1107-29	526184	1	HOSE, rear, brake flexible	16-13/16"
(1107-26-1)	536652	2	HOSE, HYDROVAC - C-K (less A.C.)	7-5/8"
	675466	2	CLIP, lock (with power brake)	
1107-30	675466	3	CLIP, lock	
	195569	3	GASKET, brake pipe hose - copper	
			Brake Hose Brackets	
1107-32	526154	2	BRACKET, front brake hose (for 523614 hose) (before SN 6032261)	
1107-32	1541412	2	BRACKET, front brake hose (for 523614 hose)	
1107-32	1541934	2	BRACKET, front brake hose (for 519637 hose)	
1107-34	536528p	1	BRACKET, HYDROVAC hose - C-K	
	g181311	2	BOLT, to fender 1/4" - 28 x 5/8" - C-K	
	g103024	2	NUT, hex. 1/4" - 28	
	g120380	2	WASHER, lock 1/4"	
	536684	1	PLATE, rear hose extension - C-K (single exhaust)	
	1541478	1	PLATE, rear hose extension - C-K (dual exhaust)	
	g181338	1	BOLT, fastening 5/16" - 24 x 7/8"	
	g103025	1	NUT, hex. 5/16" - 24	
	g128144	1	WASHER, plain 5/16"	
	g120214	1	WASHER, lock 5/16"	
			Brake Pipe Tee	
1107-38	1539779	1	TEE and BRACKET, front brake pipe - LHC	
1107-40	194697	1	TEE, rear brake pipe (fastened to R/A housing)	
	41x562	1	SPACER, fitting (for 1539779)	
	299288	1	SPACER, fitting 1/8" thick (for 194697)	
	g443945	1	SCREW, to frame 5/16" - 18 x 1" (for 1539779)	
	1541322	1	SCREW, to housing (special) (for 194697)	
	g120380	1	WASHER, lock 1/4"	
			Brake Pipe Union	
1107-45	g137412	1	UNION, brake pipe (with NoRol) - C-K (w/power brakes)	

ILLUST. NUMBER	PART NUMBER	PER CAR	DESCRIPTION
1108 - BRAKE PEDAL (Plates 11-3, 4)			
1108-1	536141	1	PEDAL w/BUSHINGS, brake (incl. grease fitting) (less power brakes)
1108-1	536521	1	PEDAL w/BUSHINGS, brake (incl. grease fitting) (w/power brakes) C-K
1108-1	679093	1	GREASE FITTING (alemite straight)
1108-2	517152	2	BUSHING, brake pedal
1108-3	g138018	1	BOLT, to frame 3/8" - 24 x 4-7/8" (with AD. less power brakes)
	g120369	1	NUT, hex. 3/8" - 24 (with AD. less power brakes)
	41x548	2	WASHER, plain 15/32" (with AD. less power brakes)
	g120382	1	WASHER, lock 3/8" (with AD. less power brakes)
	g272614	1	NUT, to shaft hex. 7/16" - 20 w/power brakes
	g446484	1	WASHER, plain 1/2" w/power brakes
1108-5	535189	1	SPRING, pedal pullback (less power brakes) 7-1/8" Free Length
1108-5	536622	1	SPRING, pedal pullback (w/power brakes) 3-31/32" Free Length
1108-6	194683	1	CLIP, to master cylinder
1108-7	530366	1	GROMMET, pedal
1108-8	537288	1	PAD, pedal (less power brakes) (less AD.)
1108-8	536378	1	PAD, pedal (w/power brakes) (less AD.)
1108-8	536378	1	PAD, pedal (w/AD.)
	g103026	1	NUT, hex. 3/8" - 24
	g121753	1	WASHER, sh'prf. 3/8"
	536369	1	SHAFT and BRACKET, pedal support (w/power brakes)
	g181364	2	BOLT, to frame 3/8" - 24 x 1"
	g451010	2	NUT, hex. 3/8" - 24
1109 - BRAKE RODS (Plates 11-3, 4)			
1109-7	534901	1	ROD, pedal to m/c (less power brakes)
1109-7	536380	1	ROD, pedal to m/c (w/ power brakes)
1109-9	g272121	1	NUT, lock 7/16" - 20
	42x10	1	PIN, clevis to pedal 3/8" x 27/32"
	- - - -	1	COTTER 3/32" x 1"
1110 - BRAKE CABLES (Plate 11-10)			
1110-11	533065	1	CABLE and ENDS, rear, hand brake (from equalizer to brakes) Y-C-K
	533290	2	CLIP, to bracket
1110-16	530129	1	EQUALIZER, hand brake rear cable
1110-26	532668	1	GUIDE, right, hand brake rear cable
1110-27	532669	1	GUIDE, left, hand brake rear cable - LHC
	g177999	4	SCREW, to frame No. 14 x 1/2"
1110-28	532531	1	BRACKET, right, hand brake cable
1110-29	532532	1	BRACKET, left, hand brake cable
	- - - -	4	RIVET, to frame 5/16" x 7/8"
1110-35	537542	1	BELLCRANK, hand brake - LHC
1110-37	519858	1	BOLT, pivot to bracket 3/8" - 24 x 15/16"
	g120369	1	NUT, hex. 3/8" - 24
1110-37-1	534384	1	WASHER, spring
	g120382	1	WASHER, lock 3/8"
1110-38	532666	1	BRACKET, hand brake bell crank support
	g181338	2	BOLT, to frame 5/16" - 24 x 7/8"
	g120368	2	NUT, hex. 5/16" - 24
	g120214	2	WASHER, lock 5/16"
1110-39	534284p	1	SPRING, bell crank pullback
1110-40	535108	1	ROD, rear cable adjusting
	42x114	1	PIN, to bell crank 5/16" x 1/2"

ILLUST. NUMBER	PART NUMBER	PER CAR	DESCRIPTION
	g120368	2	NUT, to equalizer 5/16" - 24
	41x429	1	WASHER, plain 5/16"
	- - - -	1	COTTER, 3/32" x 1"

1112 - POWER BRAKE OR HYDROVAC UNIT, CHECK VALVE AND PIPES (Plates 11-7, 8, 9)

The HYDROVAC Model No. is stamped on a metal tag held by the cylinder hook bolt. Check same before ordering parts.

	AC-2710	1	HYDROVAC KIT (consists of all parts required for field installation) (model #376500)
1112-1	537933	1	HYDROVAC UNIT, brake (model #377478) (with 7/16" dia. hydraulic valve piston - Used on models before car serial 6030960)
1112-1	1540127	1	HYDROVAC UNIT, brake (model #377678) - Used on models on and after serial 6030960)
1112-1	1544394	1	HYDROVAC UNIT, brake (model #378003)
	g181333	1	SCREW, to bracket 5/16" - 24 x 5/8" - C-K
	g120368	*	NUT, hex. 5/16" - 24
	g120214	*	WASHER, lock 5/16"
	537938	1	HYDROVAC REPAIR KIT (for 537933 Hydrovac unit) consists of:

1 - 683647 Ball	1 - 681950 Pin
1 - 536981 Cup	1 - 536996 Seal
2 - 537927 Cup	1 - 677377 Seal
2 - 677381 Cup	1 - 536983 Snap ring
1 - 679713 Cup	1 - 537530 Snap ring
1 - 536980 Cushion	1 - 677372 Snap ring
1 - 677442 Diaphragm	2 - 677412 Snap ring
1 - 536995 Gasket	1 - 1651x6 Speed nut
1 - 677375 Gasket	1 - 677410 Spring
1 - 677453 Gasket	1 - 677384 Washer
1 - 677456 Gasket	1 - 677390 Washer
1 - 678134 Hair	

	1540674	1	HYDROVAC REPAIR KIT (for 1540127 Hydrovac unit) consists of:

1 - 683647 Ball	1 - 681950 Pin
1 - 536981 Cup	1 - 536996 Seal
1 - 1540629 Cup	1 - 677377 Seal
2 - 677381 Cup	1 - 536983 Snap ring
1 - 679713 Cup	1 - 537530 Snap ring
1 - 536980 Cushion	1 - 1540670 Snap ring
1 - 1540637 Diaphragm	1 - 1540671 Snap ring
1 - 536995 Gasket	1 - 677412 Snap ring
1 - 677375 Gasket	1 - 1651x6 Speed nut
1 - 677453 Gasket	1 - 677410 Spring
1 - 677456 Gasket	1 - 677390 Washer

	1541846	1	HYDROVAC REPAIR KIT (for 1544394 Hydrovac unit) consists of:

1 - 536981 Cup	1 - 1541729 Retainer
1 - 1540629 Cup	1 - 677610 Screw
1 - 1543369 Cup	1 - 536996 Seal
2 - 677381 Cup	1 - 677377 Seal
1 - 679713 Cup	2 - - - - Seal
1 - 536980 Cushion	1 - 537530 Snap ring
1 - 1540637 Diaphragm	1 - 1541731 Sleeve
1 - 536995 Gasket	1 - 1651x6 Speed nut
1 - 677375 Gasket	1 - 1541730 Spring
1 - 677453 Gasket	1 - 677611 Washer
1 - 677456 Gasket	1 - 677390 Washer

ILLUST. NUMBER	PART NUMBER	PER CAR	DESCRIPTION
1112-3	536523p	1	BRACKET, HYDROVAC to fender - C-K - less A.C.
	g181313	4	BOLT, to fender 1/4" - 28 x 1" C-K less A.C.
	g120367	4	NUT, hex. 1/4" - 28 C-K less A.C.
	g120380	4	WASHER, lock 1/4" C-K - less A.C.
			Vacuum Cylinder, Piston, Push Rod and Parts
1112-4	536998	1	CYLINDER SHELL, HYDROVAC For Hydrovac models No. 377478 and No. 377678 check model before ordering.
1112-4	1541928	1	CYLINDER SHELL, HYDROVAC For Hydrovac model No. 378003 check model before ordering.
1112-5	537003	4	HOOK BOLT, to end plate
	g143932	1	PLUG, pipe 3/8"
	g453345	4	NUT, hex. 5/16" - 24
	g120214	4	WASHER, lock 5/16"
1112-11	536967	1	TUBE and ELBOW, valve body to cylinder pipe hose
1112-12	537002	1	HOSE, vacuum 2-1/4" long
	677489	1	PISTON PACKING KIT, vacuum - consists of: 1 - 677460 Felt; 1 - 677417 Ring; 1 - 677416 Packing; 1 - 677422 Seal; 1 - 677419 Nut
1112-14	677421	1	PLATE, outer, vacuum piston
1112-16	677420	1	PLATE, inner, vacuum piston
			Incl. in kit
1112-18	677416	1	PACKING, vacuum piston - leather 677489
1112-19	677460	1	WICK, vacuum piston 677489
1112-21	677418	1	RETAINER, felt
1112-23	677417	1	RING, piston packing expander 677489
1112-26	536973	1	PUSH ROD and END, HYDROVAC
1112-28	677419	1	NUT, vacuum piston lock 9/16" - 18 677489
1112-30	677423	1	WASHER, vacuum piston stop
1112-32	536976	1	SPRING, vacuum piston return - for Hydrovac model 377478, check model before ordering.
1112-32	1540641	1	SPRING, vacuum piston return - for Hydrovac models 377678, and 378003, check model before ordering.
1112-36	677377	1	SEAL, push rod - leather (located in end plate) 537237, 537938, 1540674, 1541846
1112-38	677422	1	SEAL, push rod - rubber (located between vacuum piston plates) 677489
1112-40	536956	1	END PLATE w/SEAL, HYDROVAC for Hydrovac model No. 377478, check model before ordering.
1112-40	1540623	1	END PLATE w/SEAL, HYDROVAC for Hydrovac models No. 377678 and 378003, check model before ordering.
1112-42	677453	1	GASKET, HYDROVAC end plate 537237, 537938, 1540674

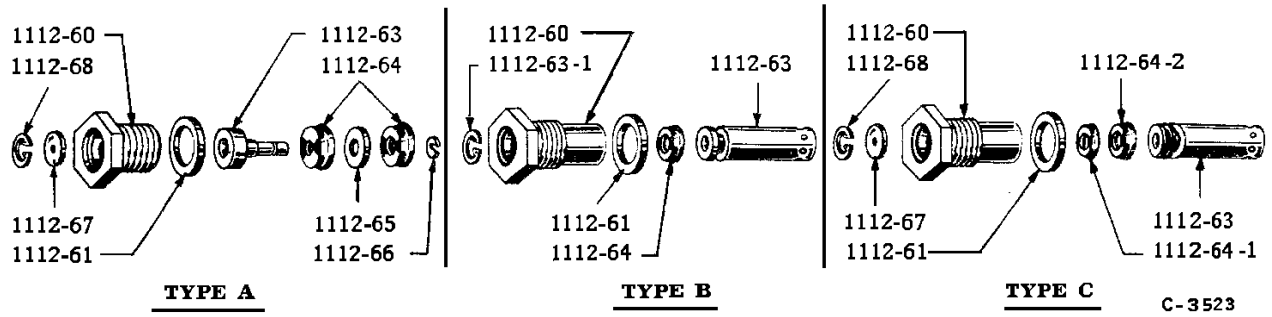

ILLUST. NUMBER	PART NUMBER	PER CAR	DESCRIPTION
			Control Valve, Diaphragm, Piston, Etc.
1112-44	536962	1	BODY and POPPETS, control valve
	2050x2	5	SCREW, to end plate No. 8 - 32 x 5/16"
1112-47	677456	1	GASKET, control valve body 537237, 537938, 1540674, 1541846
	537239	1	CONTROL VALVE REPAIR KIT, vacuum atmospheric side - consists of: 1 - Seal 1 - Screw 1 - Washer 1 - Seal assy.
1112-49	536971	1	SCREEN, control valve body
1112-50	677412	1	SNAP RING, retaining 537237, 537938, 1540674
1112-52	678134	1	HAIR, control valve 537237, 537938
1112-52-3	536970	1	RETAINER
1112-52-4	677412	1	SNAP RING 537237, 537938
1112-53	677442	1	DIAPHRAGM and PLATES, control valve - For Hydrovac model No. 377478, check model before ordering. 537237, 537938
1112-53	1540637	1	DIAPHRAGM and PLATES, control valve - For Hydrovac models No. 377678 and No. 378003, check model before ordering. 1540674
1112-54	677410	1	SPRING, valve poppet 537237, 537938, 1540674, 1541846
1112-55	536997	1	SPRING, control valve seat - For Hydrovac model No. 377478, check model before ordering.
1112-55	1540640	1	SPRING, control valve seat - For Hydrovac models No. 377678 and No. 378003, check model before ordering.
1112-57	679055	1	BLEEDER FITTING, control valve (located in end plate)
1112-60	537930	1	FITTING, hydraulic valve piston Type A (for 7/16" dia. piston) For Hydrovac No. 377478 check model before ordering.
1112-60	1540626	1	FITTING, hydraulic valve piston Type B For Hydrovac model No. 377678 check model before ordering.
1112-60	1561728	1	FITTING, hydraulic valve piston Type C For Hydrovac model No. 378003 check model before ordering. **Incl. in kit**
1112-61	677375	1	GASKET, hydraulic valve piston fitting 537237, 537938, 1540674, 1541846
1112-63	537928	1	PISTON, hydraulic valve (7/16" dia.) Type A For Hydrovac model No. 377478 check model before ordering.
1112-63	▲1540628	1	PISTON, hydraulic valve (use 1543368) Type B For Hydrovac model No. 377678 check model before ordering.
1112-63	1543368	1	PISTON, w/CUPS, hydraulic valve Type C For Hydrovac model No. 378003 check model before ordering.
1112-63-1	1540671	1	SNAP RING, retaining Type B For Hydrovac model No. 377678 check model before ordering.

ILLUST. NUMBER	PART NUMBER	PER CAR	DESCRIPTION
1112-64	537927	2	CUP, hydraulic valve piston 7/16" dia.
			- rubber Type A 537938
			For Hydrovac No. 377478 check model before ordering.
1112-64	1540629	1	CUP, hydraulic valve piston - rubber - Type B 1540674
			For Hydrovac model No. 377678 check model before ordering.
1112-64-1	1543369	1	CUP, front, hydraulic valve piston
			- rubber - Type C 1541846
			For Hydrovac model No. 378003 check model before ordering.
1112-64-2	1540629	1	CUP, rear, hydraulic valve piston
			- rubber - Type C 1541846
			For Hydrovac model No. 378003 check model before ordering.
1112-65	537926	1	RETAINER, cup (for 537927) - Type A
1112-66	677384	1	WASHER, "C" (for 677381, 537926) Type A 537237, 537938
1112-67	677373	1	WASHER, hydraulic valve piston stop Type A,C
			For Hydrovac models No. 377478, and 378003
			check model before ordering.
1112-68	677372	1	SNAP RING, retaining Type A,C
			For Hydrovac models No. 377478, and 378003
			check model before ordering.
			Hydraulic Cylinder, Piston, Etc.
1112-70	536992	1	TUBE, hydraulic cylinder
1112-71	536993	1	NUT, check 1-1/4" - 18
1112-72	536994	1	CAP, hydraulic cylinder end plug or
1112-73	536995	1	GASKET, hydraulic cylinder cap -
			copper 537237, 537938, 1540674
1112-75	679055	1	FITTING, hydraulic cylinder bleeder
1112-79	536996	1	SEAL, small, hydraulic cylinder
			rubber 537237, 537938, 1540674
1112-80	1544122	1	SEAL, large, hydraulic cylinder
1112-81	536977	1	PISTON COMPLETE, hydraulic
1112-82	536981	1	CUP, hydraulic piston - rubber 537237, 537938, 1540674
1112-84	683647	1	BALL, hydraulic piston check
			valve 9/32" 537237, 537938, 1540674
1112-85	677433	1	SPRING, ball return
1112-86	536982	1	RETAINER, spring
1112-87	536983	1	SNAP RING, retainer 537237, 537938, 1540674
1112-88	536984	1	DEFLECTOR, hydraulic piston
1112-89	1651x6	1	SPEED NUT 537237, 537938, 1540674
1112-90	681950	1	PIN, hydraulic piston retaining 537237, 537938, 1540674
1112-92	536980	1	CUSHION, hydraulic piston 537237, 537938, 1540674
1112-94	536960	1	WASHER, hydraulic piston stop
1112-95	537530	1	SNAP RING, washer 537237, 537938, 1540674
1112-97	679713	1	CUP, hydraulic piston push
			rod seal 537237, 537938, 1540674, 1541846
1112-98	680264	1	RETAINER, seal cup - For Hydrovac models No.
			377478 and No. 377678 check model before ordering.
	▲- - - -	1	RETAINER, seal cup - (use 1541843 kit)
			For Hydrovac model No. 378003 check model
			before ordering.
1112-100	677390	1	WASHER, push rod guide 537237, 537938, 1540674, 1541846
	1541843	1	PUSH ROD RETAINER RING KIT For Hydrovac model No. 378003
			check model before ordering.
			consists of:
			1 - - - - - Retainer 1 - - - - - Spring
			1 - - - - - Sleeve

ILLUST. NUMBER	PART NUMBER	PER CAR	DESCRIPTION
			Hydrovac Fittings
1112-103	512770	2	FITTING, brake HYDROVAC pipe (inlet and outlet)
	185165	2	WASHER 33/64" - copper or alum.
1112-105	189696	1	SCREW, inlet, to HYDROVAC - C-K
1112-105-2	185163	1	SCREW, outlet, to HYDROVAC - C-K
	185164	2	WASHER, to fitting 39/64" - copper or alum.
1112-107	199218	1	ELBOW, fitting to HYDROVAC outlet screw - C-K
			Check Valve
1112-120	536985	1	CHECK VALVE, HYDROVAC - K7-K9 - less A.C.
1112-120	1544413	1	CHECK VALVE, HYDROVAC - K7-K9 - with A.C.
1112-120-1	536987	1	BALL, check valve (for 536985)
1112-120-2	536988	1	SPRING, ball return (for 536985)
1112-120-3	536989	1	RETAINER, spring (for 536985)
1112-120-4	536990	1	SNAP RING, retainer (for 536985)
	675721	1	NIPPLE, vacuum hose to carburetor - K7-K9
1112-125	675058	1	ELBOW, vacuum hose to valve
1112-135	536604x2	1	HOSE, manifold to check valve - rubber - C-K
	- - - -	2	CLAMP, hose 5/8"

1116 - HAND OR PARKING BRAKE

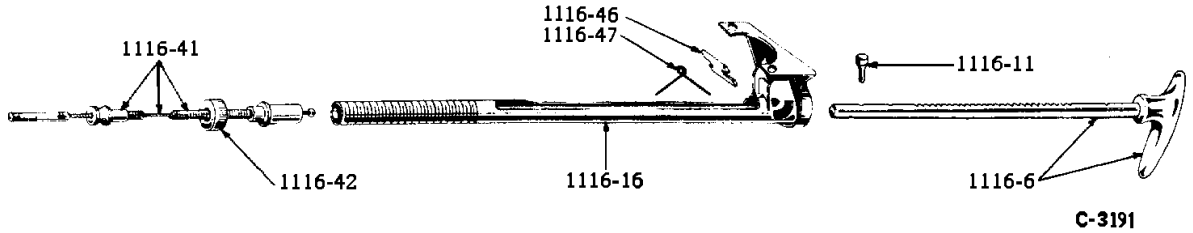

	AC-2776	1	KIT, parking brake warning light	g127934 1
BULB, parking brake warning light (incl. in AC-2776 kit)				
1116-1	- - - -	1	CONTROL COMPLETE, hand brake (see separate parts)	
	1540012	1	SPACER, to inst. board (wood) C-K	
	g271136	2	SCREW, fastening No. 10 x 3/4" - W-Y-F-D-P-J	
	g445560	2	SCREW, fastening No. 10 x 1-3/4" - C-K	
	g120391	2	WASHER, plain No. 10	
	22x52	2	NUT, guide to dash 11/16" - 16	
1116-6	535514	1	HANDLE and PLUNGER, control cable pull	
1116-11	535326	1	PIN, control cable pull handle and plunger guide	
1116-16	535323p	1	GUIDE, control handle and plunger - C-K - LHC	
1116-41	535307	1	CABLE and CONDUIT, control - C-K - LHC	
1116-42	535278	1	NUT, to guide - special	
1116-46	535324	1	LATCH or PAWL, control plunger	
1116-47	535325	1	SPRING, pawl	
1116-60	195506	1	CLEVIS, control cable (illust. plate 11-10)	
1116-61	g120367	1	NUT, hex. 1/4" - 28	
	42x1	1	PIN, clevis 1/4" x 3/4"	
	- - - -	1	COTTER, 1/16" x 3/4"	
	521738	1	CLAMP, control cable conduit to dash	
	g120375	1	NUT, hex. 3/8" - 24	
	g120380	1	WASHER, lock 1/4"	
	530353	1	COVER, control cable conduit clamp hold	

* - Use as required
▲ - Not available

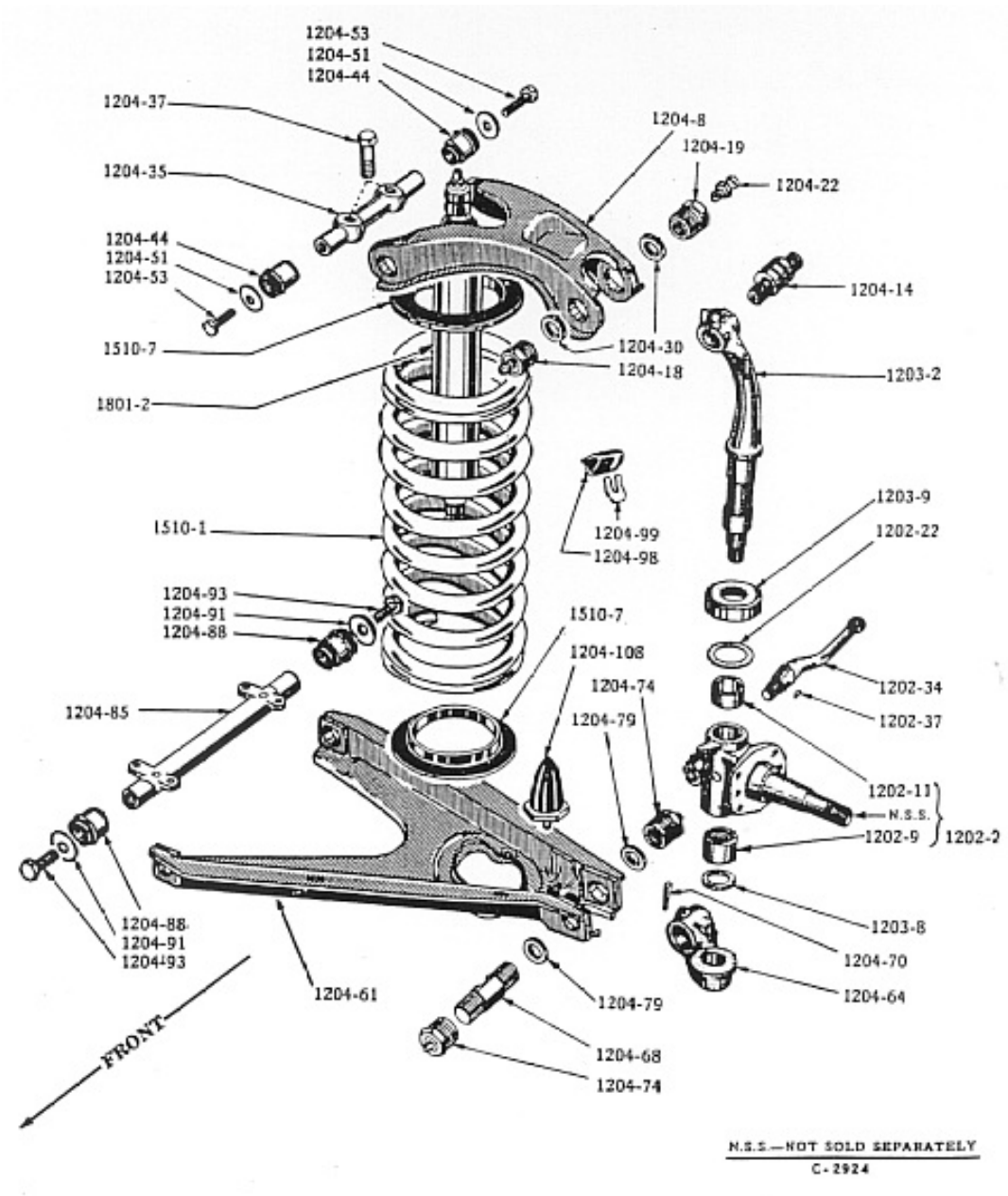

STEERING KNUCKLE, CONTROL ARMS and KING PINS

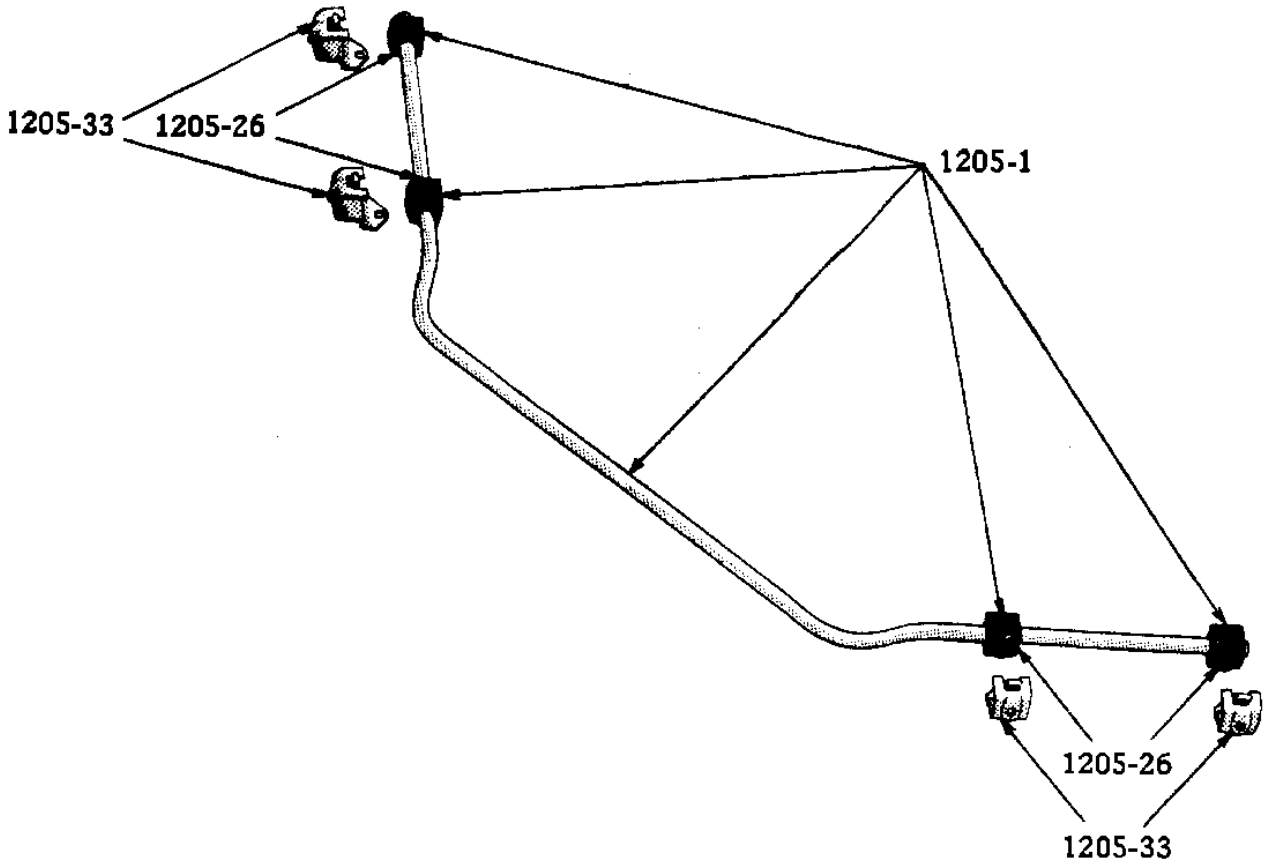

MODELS 16G, 6H, 56G-B-H-J, 57B-H-L

1205 - STEERING KNUCKLE CONTROL ARM STABILIZER

1205-1	532191	1	SHAFT w/BUSHING, control arm stabilizer
1205-26	529392	4	BUSHING, stabilizer shaft - rubber
1205-33	529391	4	RETAINER, stabilizer shaft bushing
	g181608	4	BOLT, to arm 5/16" - 24 x 1"
	g120368	4	NUT, hex. 5/16" - 24
	g120214	4	WASHER, lock 5/16"

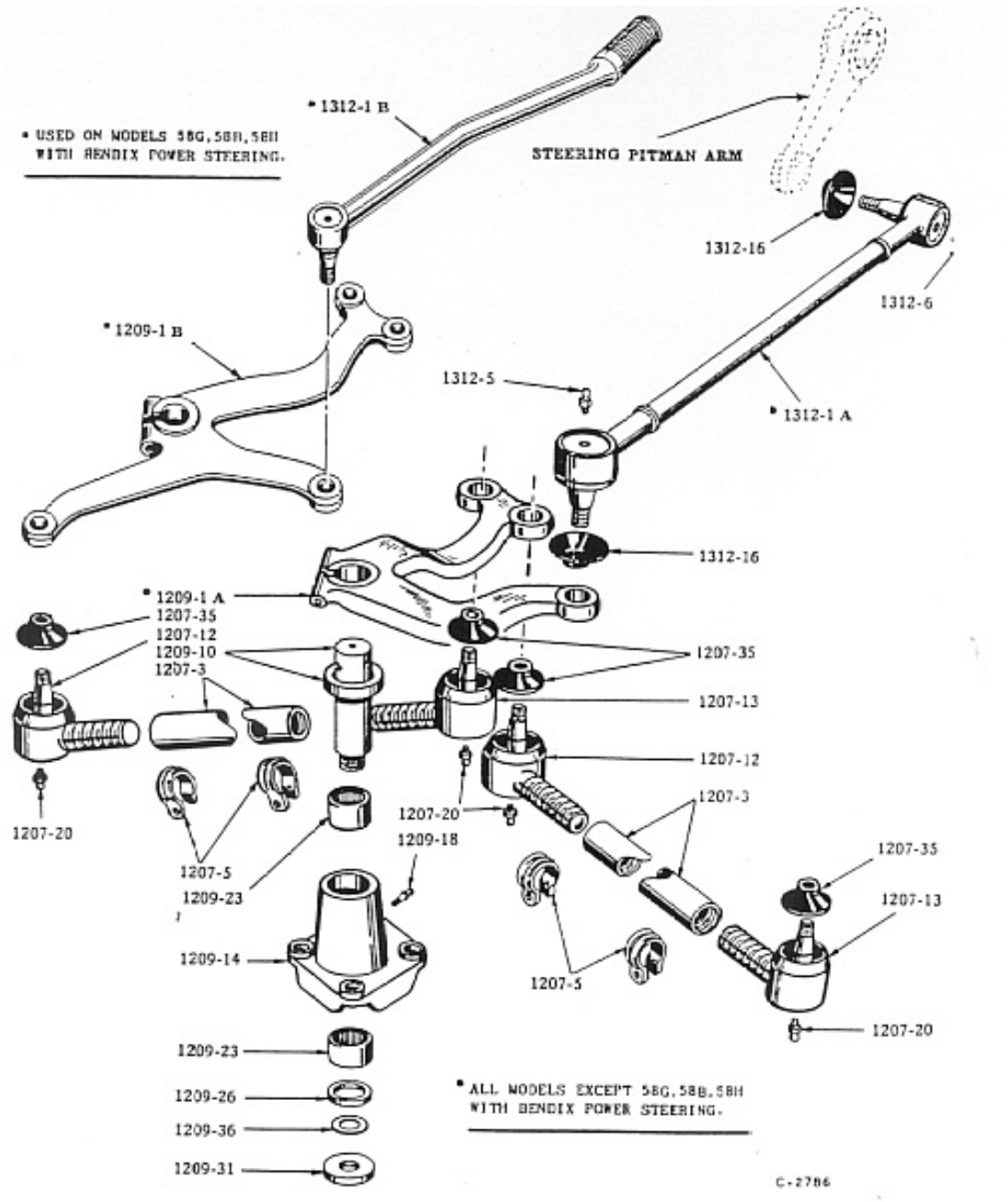

STEERING LINKAGE

ILLUST. NUMBER	PART NUMBER	PER CAR	DESCRIPTION	
1202 - STEERING KNUCKLE AND ARM (Plate 12-1)				
1202-2	531980	1	KNUCKLE, right, steer. (incl. bearing and upper bushing)	
1202-2	531981	1	KNUCKLE, left, steer. (incl. bearing and upper bushing)	
	g191758	2	GREASE FITTING, alemite straight	
1202-9	196859	2	BEARING, lower, steer. knuckle (incl. in 533888 kit)	
1202-11	527981	2	BUSHING, upper, steer. knuckle (incl. in 533888 kit)	
				Thickness
1202-22	193684	*	SHIM, steer. knuckle (incl. in 533888 kit)	.009-.011
1202-22	193685	*	SHIM, steer. knuckle	.012-.014
1202-22	193686	*	SHIM, steer. knuckle	.015-.017
1202-22	193687	*	SHIM, steer. knuckle	.018-.020
1202-22	193688	*	SHIM, steer. knuckle	.021-.023
1202-34	529050	2	ARM, steer. knuckle	
1202-37	g124549	2	KEY, woodruff, to knuckle 3/16" x 3/4"	
	g119256	2	NUT, to knuckle 5/8" - 18	
	- - - -	2	COTTER 1/8" x 1/4"	

1203 - STEERING KNUCKLE KING PIN AND BEARINGS (Plate 12-1)

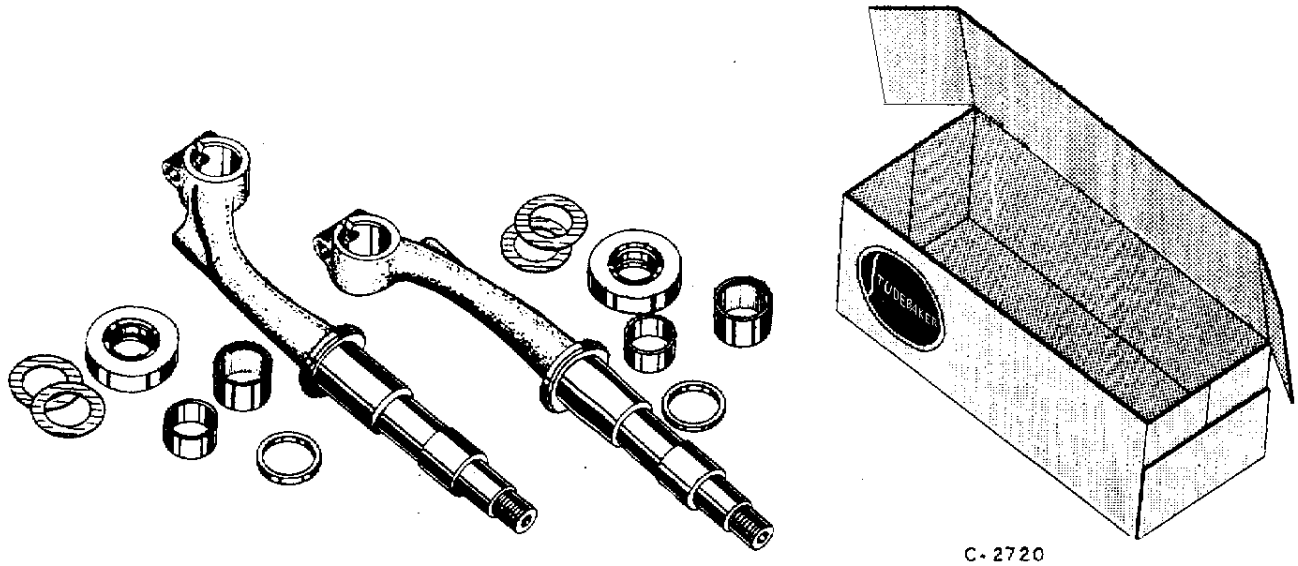

	533888	1	KING PIN KIT - consists of:	
			1 - 533762 King pin, right	2 - 196859 Bearing, lower
			1 - 533763 King pin, left	2 - 636965 Bearing, thrust
			2 - 527981 Bushing, upper	4 - 193684 Shim, knuckle
			2 - 519483 Gasket, King pin	
1203-2	533762	1	PIN, right, king (incl. in 533888 kit)	
	533763	1	PIN, left, king (incl. in 533888 kit)	
	1543223	2	NUT, to support 3/4" - 16	
	41x156	2	WASHER, plain 3/4"	
	- - - -	2	COTTER 1/8" x 1-1/2"	
1203-8	519483	2	GASKET, king pin (incl. in 533888 kit)	
1203-9	636965	2	BEARING, knuckle thrust (incl. in 533888 kit)	

ILLUST. NUMBER	PART NUMBER	PER CAR	DESCRIPTION

1204 - STEERING KNUCKLE CONTROL ARM (Plate 12-1)

Upper Control Arm, Pin, Shaft, Etc.

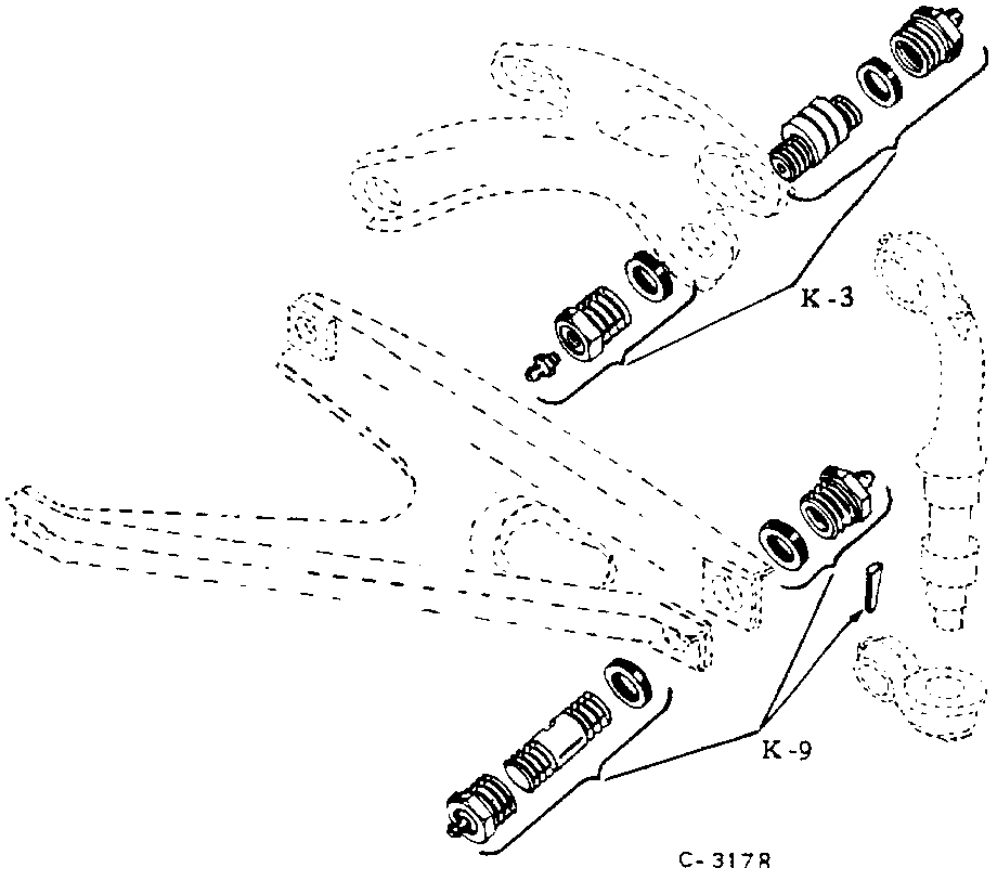

K3	531190	2	PIN and BUSHING KIT, upper control arm pivot - consists of: 1 - 524227 Pin 1 - 529281 Bushing 1 - 1544035 Bushing 2 - 525035 Seal 1 - g191758 Fitting
1204-8	532181	2	ARM, upper, knuckle control
1204-14	524227	2	PIN, upper control arm pivot (incl. in 531190 kit)
	g181647	2	BOLT, clamping, thru king pin 3/8" - 24 x 1-7/8"
	g120369	2	NUT, clamp bolt, hex. 3/8" - 24
	g120382	2	WASHER, lock 3/8"
1204-18	1544035	2	BUSHING and GREASE FITTING, front, upper control arm pivot pin (incl. in 531190 kit)
1204-18	529281	2	BUSHING less GREASE FITTING, rear, upper control arm (NOTE: should be 1204-19?) pivot pin (incl. in 531190 kit)
1204-19 (not listed)			
1204-22	g191758	2	GREASE FITTING, rear (incl. in 531190 kit)
1204-30	525035	4	SEAL, bushing grease (incl. in 531190 kit)
1204-35	532184	2	SHAFT, upper control arm pivot

ILLUST. NUMBER	PART NUMBER	PER CAR	DESCRIPTION
1204-37	526765	4	BOLT, to frame 1/2" - 20 x 1-5/8"
	g120371	4	NUT, hex. 1/2" - 20
	- - - -	4	WASHER, lock 1/2"
1204-44	533163	4	BUSHING, upper control arm pivot shaft
1204-51	532187	4	RETAINER, upper control arm bushing
1204-53	1541700	4	SCREW, to shaft 3/8" - 24 x 1-1/8"
	g446211	4	WASHER, plain 7/16"
			Lower Control Arm, Pin, Shaft, Etc.
K9	531192	2	PIN and BUSHING KIT, lower control arm pivot - (illust. previous page) consists of: 1 - 518431 Pin 2 - 199385 Seal 2 - 1544036 Bushing 1 - 510141 Key
1204-61	532182	1	ARM, lower right, knuckle control
	532183	1	ARM, lower left, knuckle control
1204-64	533764	1	SUPPORT, right, lower control arm to king pin
	533765	1	SUPPORT, left, lower control arm to king pin
	g124551	2	KEY, woodruff, to king pin 1/4" x 7/8"
1204-68	518431	2	PIN, lower control arm pivot (incl. in 531192 kit)
1204-70	510141	2	KEY, taper, to king pin (incl. in 531192 kit)
1204-74	1544036	4	BUSHING and GREASE FITTING, lower control arm pivot pin (incl. in 531192 kit)
1204-79	199385	4	SEAL, bushing (incl. in 531192 kit)
1204-85	532188	2	SHAFT, lower control arm pivot
	g181399	8	BOLT, to crossmember 7/16" - 20 x 1-3/8"
	911882x8	8	NUT, hex. 7/16" - 20
1204-88	533164	4	BUSHING, lower control arm pivot shaft
1204-91	532190	4	RETAINER, lower control arm pivot shaft bushing
1204-93	g181429	4	SCREW, to shaft 1/2" - 20 x 1-1/4"
	- - - -	4	WASHER, lock 1/2"

TYPE A TYPE B

C-3391

1204-98	537461	2	BUMPER, upper control arm - rubber (type B)
1204-99	NOT 56J		
1204-108	524230	2	BUMPER, lower control arm jounce - steel and rubber
	g451010	2	NUT, hex. 3/8" - 24
	- - - -	2	BRACKET, lower control arm jounce bumper - see group 1507

1205 - STEERING KNUCKLE CONTROL ARM STABILIZER (Plate 12-2)

1205-1	532191	1	SHAFT w/BUSHING, control arm stabilizer
1205-26	529392	4	BUSHING, stabilizer shaft - rubber
1205-33	529391	4	RETAINER, stabilizer shaft bushing
	g181608	4	BOLT, to arm 5/16" - 24 x 1"
	g120368	4	NUT, hex. 5/16" - 24
	g120214	4	WASHER, lock 5/16"

ILLUST. NUMBER	PART NUMBER	PER CAR	DESCRIPTION
1207 - STEERING KNUCKLE TIE ROD AND ENDS (Plate 12-3)			
	529248	2	ROD w/ENDS, knuckle tie - U.S.A.
	g102647	4	NUT, ball stud 1/2" - 20
	- - - -	4	COTTER, 3/32" x 1"
1207-3	527977	2	ROD ONLY, knuckle tie
1207-5	510487	4	CLAMP, knuckle tie rod
	g181341	4	BOLT, clamping 5/16" - 24 x 1-1/4"
	g120368	4	NUT, hex. 5/16" - 24
	g120214	4	WASHER, lock 5/16"
1207-12	530203	2	END, outer right, inner left (has RH thd.) - U.S.A.
1207-13	530204	2	END, inner right, outer left (has LH thd.) - U.S.A.
1207-20	g271287	4	GREASE FITTING
1207-35	530202	4	SEAL, tie rod end ball stud
1209 - STEERING BELL CRANK AND LEVER (Plate 12-3)			
1209-1A	1539053	1	BELL CRANK, steer. - LHC
	530426	1	BELL CRANK, steer. - RHC
1209-1B	g186639	1	BOLT, clamping 3/8" - 24 x 2-3/4"
	197042	1	NUT, hex. 3/8" - 24
	g120382	1	WASHER, lock 3/8"
1209-10	529239	1	SHAFT and WASHER, bell crank
	639040	1	NUT, hex. 5/8" - 18
	- - - -	1	COTTER 1/8" x 1-1/4"
1209-14	529237	1	BRACKET w/BEARINGS, bell crank
1209-18	g271288	1	GREASE FITTINGS, bell crank
	g189331	2	BOLT, long, to cross member 3/8" - 24 x 4"
	g181639	2	BOLT, short, to cross member 3/8" - 24 x 1-1/4"
	g120369	4	NUT, hex. 3/8" - 24
	41x562	2	WASHER, plain 3/8"
	g120382	4	WASHER, lock 3/8"
1209-23	525013	2	BEARING, bell crank bracket
1209-26	525007	1	SEAL, bell crank bracket
1209-31	525001	1	THRUST WASHER, lower, bell crank
1209-36	525002	*	SHIM, bell crank adjusting Thickness .009 - .011
1209-36	525003	*	SHIM, bell crank adjusting Thickness .012 - .014
1209-36	525004	*	SHIM, bell crank adjusting Thickness .015 - .017
1209-36	525005	*	SHIM, bell crank adjusting Thickness .018 - .020
1209-36	525006	*	SHIM, bell crank adjusting Thickness .021 - .023

* - Use as required ▲ - Not available

STANDARD STEERING GEAR

From page 401 - Chassis Parts Manual

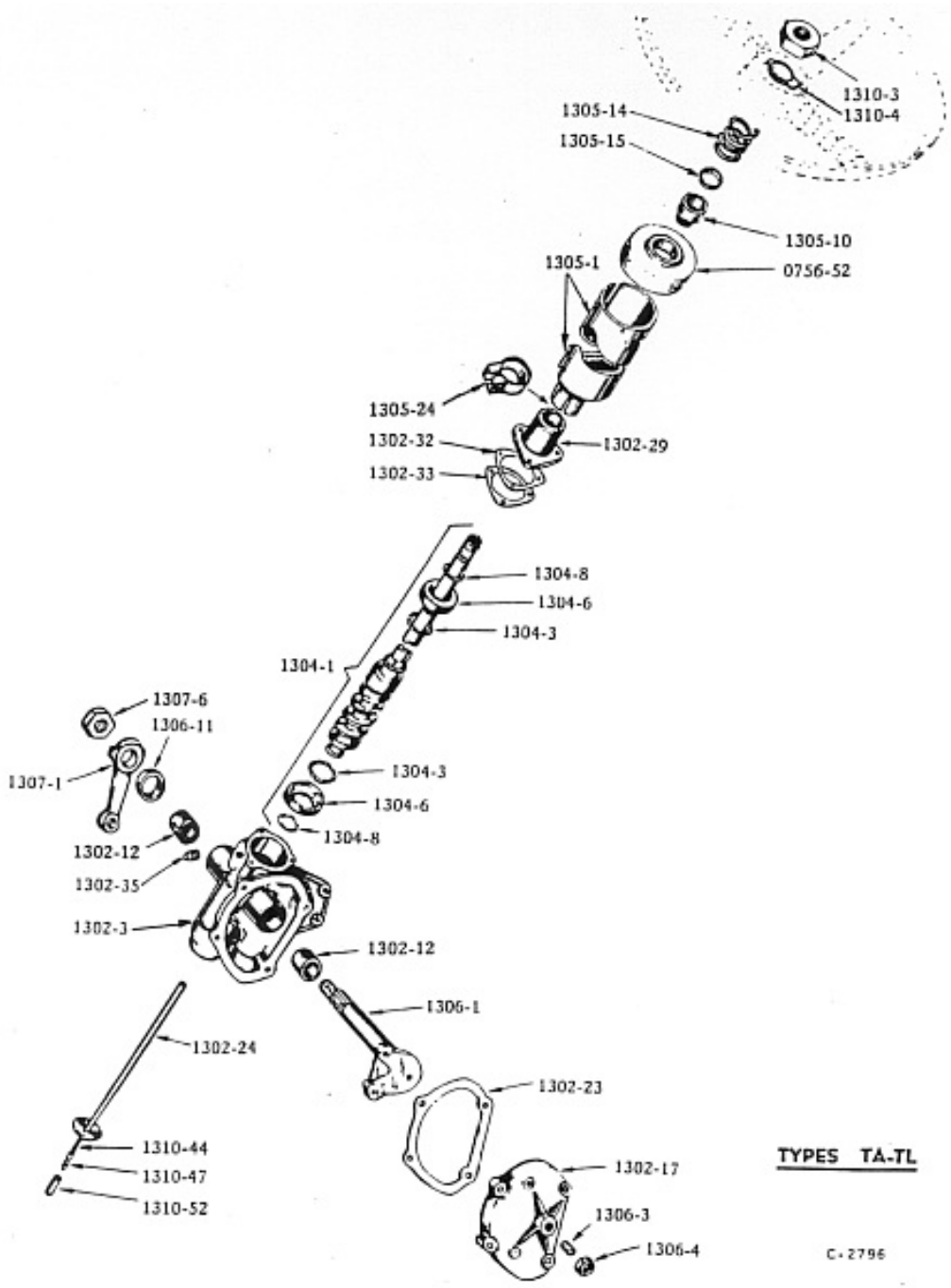

STANDARD STEERING GEAR

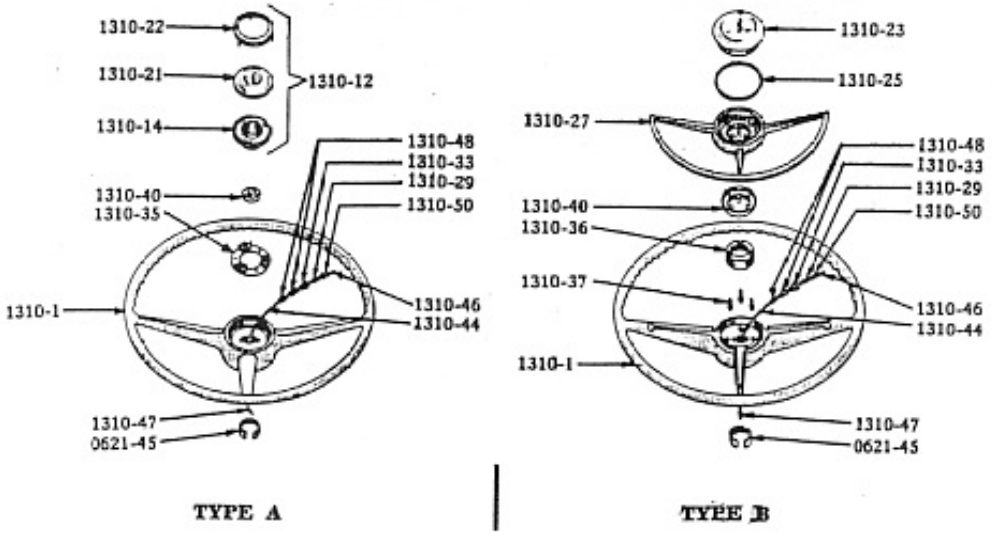

USED WITH STANDARD STEERING AND BENDIX POWER STEERING USED WITH SAGINAW POWER STEERING C-3479

TYPICAL STEERING WHEELS

ILLUST. NUMBER	PART NUMBER	PER CAR	DESCRIPTION

1301A - STEERING GEAR (Plate 13-1)

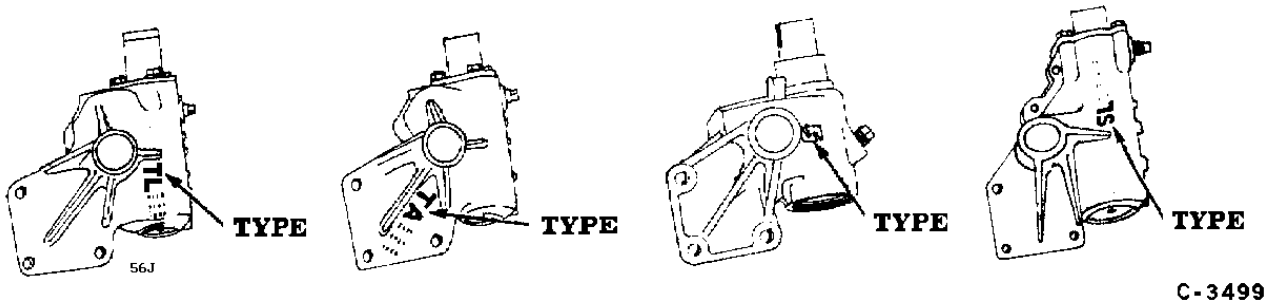

Location of Type Symbols

Type TL steering gear is used on LHC Model 56J South Bend and Los Angeles built cars.
The following steering gear assemblies include: housing, post, cam lever shaft, side and end covers, but less jacket, wheel and arm.

				Type
	534306	1	STEERING GEAR ASSY. - LHC - C-K	TL
	g120395	*	SPACER, to frame 1/16" thick	
	41x336	*	SPACER, to frame 1/32" thick	
	41x359	*	SPACER, to frame 1/8" thick	
	g186310	2	BOLT, to frame 3/8" - 24 x 3-1/2"	
	g187227	1	BOLT, to frame 3/8" - 24 x 3-1/8"	
	g451010	3	NUT, hex. 3/8" - 24	
	41x562	*	WASHER, plain 3/8"	

1302A - STEERING GEAR HOUSING AND COVERS (Plate 13-1)

1302-3	532582	1	HOUSING, steering gear - LHC - C-K	TL
			For fastening parts, see steering gear assembly	
1302-12	680210	2	BUSHING, housing - LHC	TL
1302-17	530914	1	COVER, housing side - LHC	
	g179816	4	SCREW, to housing 5/16" - 18 x 3/4" (for 531144)	
			(Parts manual lists above item for 56J but does not list 531144 as a 56J item)	
	g120214	4	WASHER, lock 5/16" (for 531144)	
			(Parts manual lists above item for 56J but does not list 531144 as a 56J item)	
	189134	4	SCREW, to housing 5/16" - 18 x 1" (for 530914)	
	g115308	2	WASHER, plain 5/16" (for 530914)	
	g120214	4	WASHER, lock 5/16"	
1302-23	530916	1	GASKET, housing side cover - LHC	TL
1302-24	530907	1	COVER and TUBE, housing end - LHC	TL
1302-29	532473	1	COVER, housing top - LHC	TL
	170710	3	SCREW, to housing 5/16" - 18 x 3/4"	TL
	g120214	3	WASHER, lock 5/16"	TL
1302-32	197108	*	GASKET, housing top cover - brass	TL
1302-33	197109	*	SHIM, housing top cover .003	TL
1302-33	197110	*	SHIM, housing top cover .010	TL
1302-35	g103878	1	PLUG, housing grease 1/4" pipe	TL
	- - - -		STEERING POST GEAR SHIFT - see Group 0756	

ILLUST. NUMBER	PART NUMBER	PER CAR	DESCRIPTION	Type
1304A - STEERING GEAR POST AND CAM (Plate 13-1)				
1304-1	534312	1	POST and CAM, steering - LHC - C-K (Includes: bearing balls, cups and lock rings.)	TL
1304-3	g145641	22	BALL, post cam bearing 5/16"	TL
1304-6	197101	2	CUP, post cam bearing	TL
1304-8	197100	2	LOCK RING, cup (for 197101)	

1305A - STEERING POST JACKET AND BRACKET (Plate 13-1)

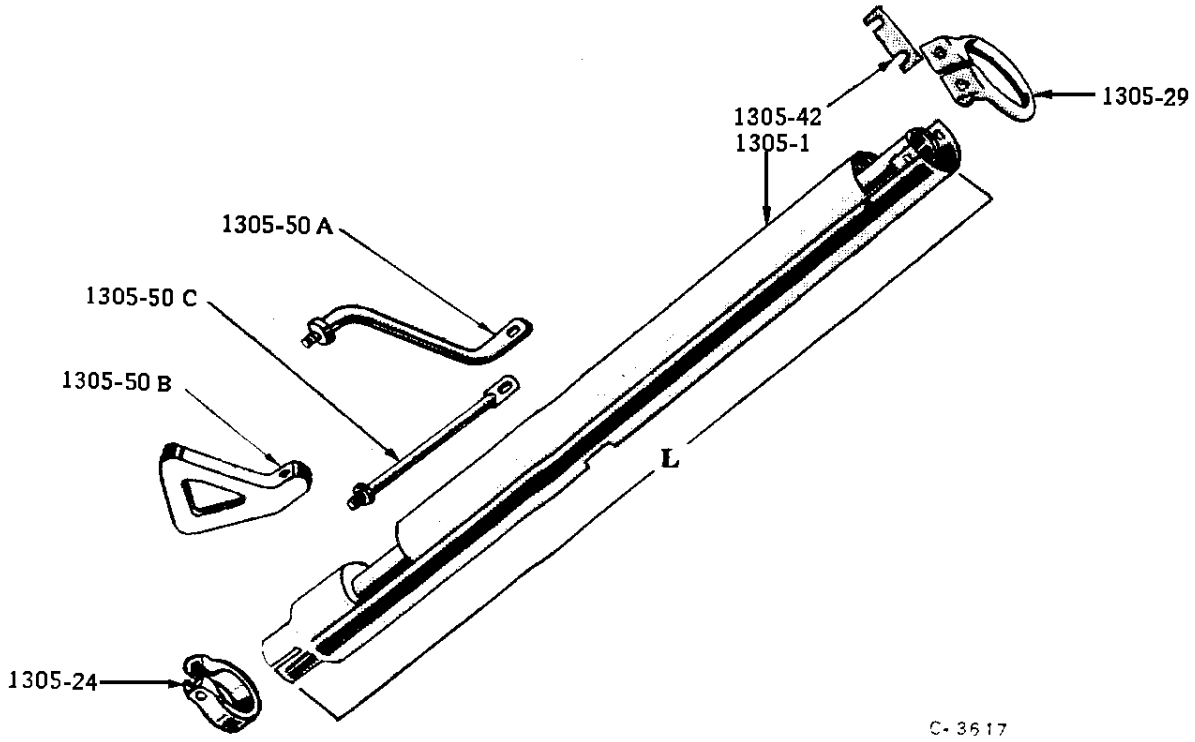

STEERING POST JACKET

USED WITH STANDARD STEERING AND BENDIX POWER STEERING

1305-1	532537p	1	JACKET, post - K - w/OD.	Length = 35-3/16"
1305-1	1539822p	1	JACKET, post - K - w/AD.	Length - 35-11/64"
(0756-52)	- - - -	1	BRACKET, shaft upper - see bracket - Group 0756	
(0850-52)	- - - -	1	BRACKET, shaft upper - see bracket - Group 0850	
(0756-31)	- - - -	1	SUPPORT, gear shift lever - see support - group 0756	
(0850-31)	- - - -	1	SUPPORT, gear shift lever - see support - group 0850	
1305-10	532449	1	BEARING, jacket	
1305-14	534227	1	SPRING, jacket bearing	
1305-15	192414	1	SEAT, jacket bearing spring	
1305-24	532885p	1	CLAMP, jacket	
	g181346	1	BOLT, clamping 5/16" - 24 x 1-7/8"	
	g180368	1	NUT, hex. 5/16" - 24	
	g114605	1	WASHER, lock 5/16"	
1305-29	532994p	1	BRACKET, steering post	

ILLUST. NUMBER	PART NUMBER	PER CAR	DESCRIPTION	
1305-42	533342	*	SPACER, to inst. board 1/8" thick	
	652860	1	PLATE and STUDS, to inst. board	
	- - - -	2	NUT and WASHER 5/16" - 18	
	1540752	1	BOLT, clamping 5/16" - 18 x 3-1/4"	
	g131562	1	NUT, crown 5/16" - 18	
1305-50a	NOT 56J			
1305-50b	304725p	1	BRACE, bracket to cowl - LHC - C-K	
1305-50c	NOT 56J			
	1957x2	2	SCREW and WASHER, fast 5/16" - 10 x 3/4"	
	1960x4	1	SCREW and WASHER, fast 5/16" - 18 x 3/4"	
	g271184	1	NUT, hex. 5/16" - 18	
	1578x27	2	SPEED NUT 5/16" - 10	
	g120393	1	WASHER, plain 5/16"	
	g178532	*	WASHER, sh'prf. 5/16"	

1306A - STEERING GEAR CAM LEVER SHAFT (Plate 13-1)

				For type gear
1306-1	532273	1	SHAFT, cam lever - LHC	TL
1306-3	630651	1	SCREW, adj. 1/2" - 20 x 1-1/16"	
1306-4	g114496	1	NUT, lock 1/2" - 20	
1306-11	679257	1	OIL SEAL, cam lever shaft - LHC	TL

1307A - STEERING GEAR PITMAN ARM (Plate 13-1)

1307-1	1541402	1	ARM, pitman - LHC	TL
1307-6	510746	1	NUT, to shaft 3/4" - 16	TL
	g131016	1	WASHER, lock 3/4"	TL

1310A - STEERING WHEEL, HORN PUSH BUTTON, RING, CABLE, ETC. (Plates 13-1, 4)

When installing the following wheels on RHC cars with directional signals rotate signal cam 146° clockwise.

				Type Wheel
1310-1	1540647	1	WHEEL, steer. - white - C-K	B
1310-3	196821	1	NUT, to post 13/16" - 20	B
1310-4	534451	1	LOCK, plate	B
1310-23	1539735	1	CAP, horn ring	B
1310-25	532902	1	RING, retainer - rubber	B
1310-27	532888	1	HORN RING, w/contact cap	B
	1721x27	3	SCREW, to wheel No. 8 x 1-3/8"	
	524083	3	WASHER, insulating	
	g131015	3	WASHER, plain No. 8	
1310-29	532201	1	SPRING, push button (less power steer.)	B
1310-29	533462	1	SPRING, push button (w/ power steer.)	B
1310-33	196673	1	CUP, push button spring (less power steer.)	B
1310-33	533463	1	CUP, push button spring (w/power steer.)	B
1310-36	520411	1	PAD, push button shock - rubber	B
1310-37	519180	3	SPACER, push button shock pad	B
1310-40	522202	1	CAP, push button contact	B
	g448005	3	SCREW, to ring No. 6 x 1/2" (for 522202)	B
	531846	3	WASHER, insulating (for 522202)	B
	522774	3	WASHER, insulating (for 522202)	B
1310-44	1539065	1	CABLE, push button (less power steering)	
1310-46	524757	1	TERMINAL, upper	
1310-47	198667	1	TERMINAL, lower - push type	
1310-44	533468	1	CABLE, push button - C-K (w/power steering)	
1310-46	524757	1	TERMINAL, upper	
1310-47	533766	1	TERMINAL, lower - push type	
1310-48	190849	2	BUSHING, push button cable	B
1310-50	194574	1	FERRULE, push button cable (less power steering)	B
1310-50	534135	1	FERRULE, push button cable (w/power steer.)	B
1310-52	192545	1	CONNECTOR, push button cable (less power steering)	

ILLUST. NUMBER	PART NUMBER	PER CAR	DESCRIPTION
1310-55	533465	1	RING, push button cable contact (w/power steer.) (illust. plate 13-5)
1310-58	533327	1	INSULATOR, cable contact ring (with/power steer.) (illust. plate 13-5)
1310-61	533441	1	BRUSH, cable contact ring (w/power steer.) (see illust. group 1305B)
	1501x21	1	SCREW, to jacket No. 10 x 1/4"
	531089	1	RECEPTACLE, cable contact ring brush (w/power steer.)
	531090	1	HOUSING, cable contact ring brush receptacle (w/power steering)
	533782x3	1	CABLE, brush to chassis cables - C-K (w/power steer.)

1312A - STEERING REACH ROD OR DRAG LINK (Plate 12-3)

1312-1	1540183	1	ROD and ENDS, reach - LHC - C-K U.S.A.
1312-5	3036x3	1	GREASE FITTING, front (45°) LHC U.S.A.
1312-6	g271287	1	GREASE FITTING, rear (straight) LHC U.S.A.
	g102647	2	NUT, ball stud hex. 1/2" - 20
	- - - -		COTTER 3/32" x 1"
1312-16	530202	2	SEAL, reach rod end grease

* - Use as required
▲ - Not available

POWER STEERING
SAGINAW POWER STEERING GEAR
From page 417 - Chassis Parts Manual

Plate 13-5

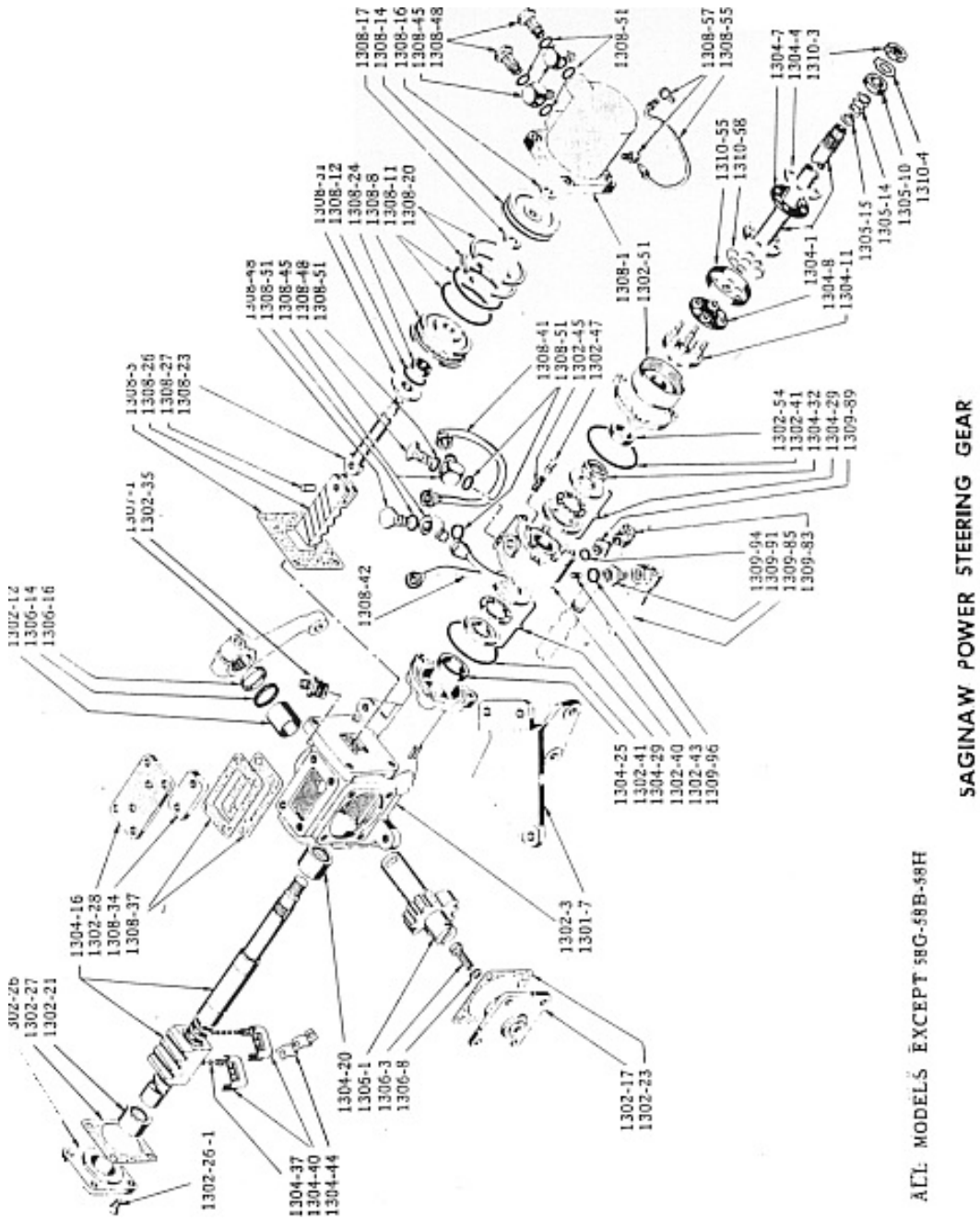

ALL MODELS EXCEPT 58G-59B-59H

SAGINAW POWER STEERING GEAR

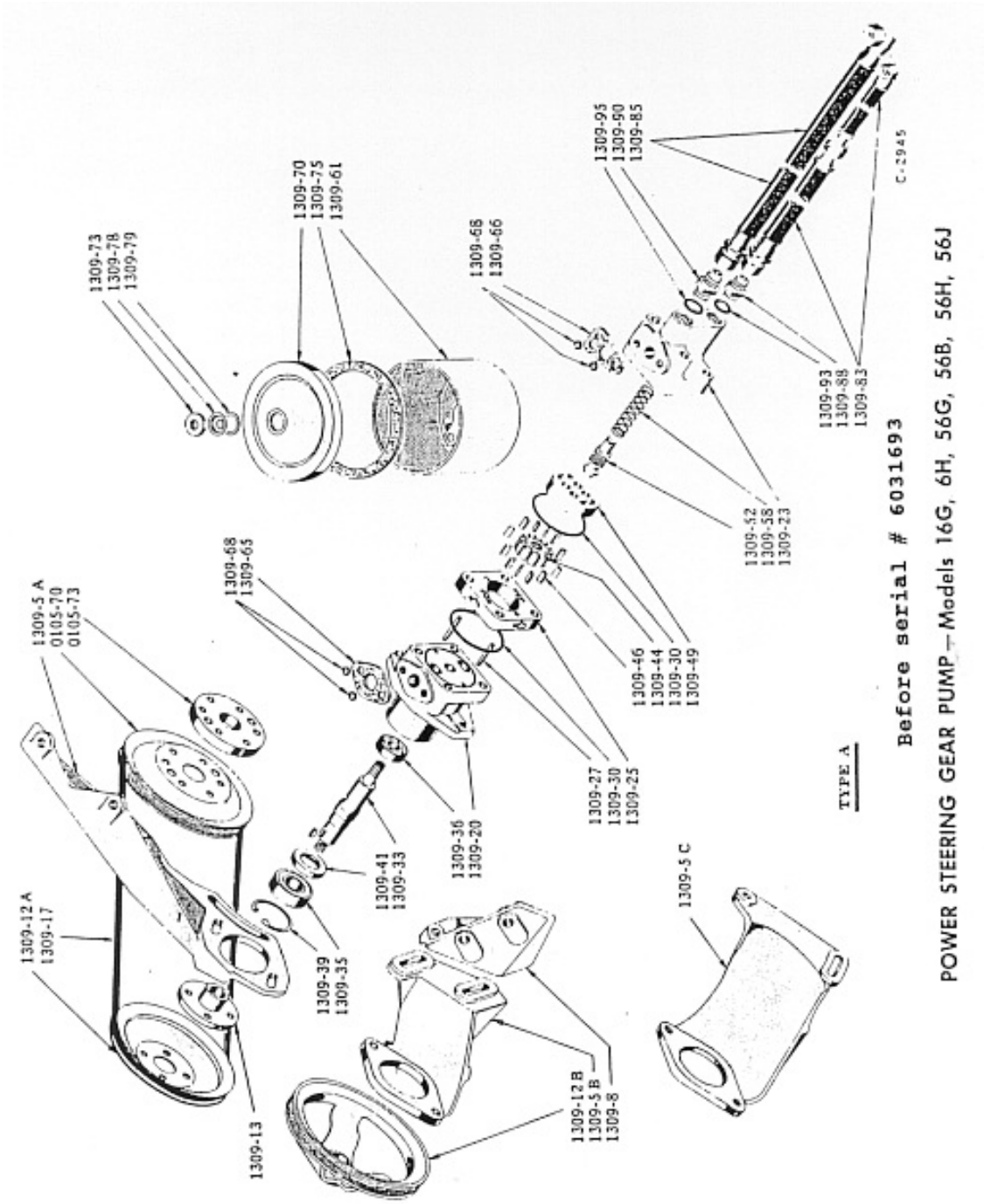
1309-73
1309-78
1309-79
1309-70
1309-75
1309-61
1309-68
1309-66
1309-95
1309-90
1309-85
C-2945
1309-93
1309-88
1309-83
1309-52
1309-58
1309-23
1309-5 A
0105-70
0105-73
1309-68
1309-65
1309-46
1309-44
1309-30
1309-49
1309-27
1309-30
1309-25
TYPE A
Before serial # 6031693
POWER STEERING GEAR PUMP—Models 16G, 6H, 56G, 56B, 56H, 56J
1309-12 A
1309-17
1309-39
1309-35
1309-41
1309-33
1309-36
1309-20
1309-5 C
1309-13
1309-12 B
1309-5 B
1309-8

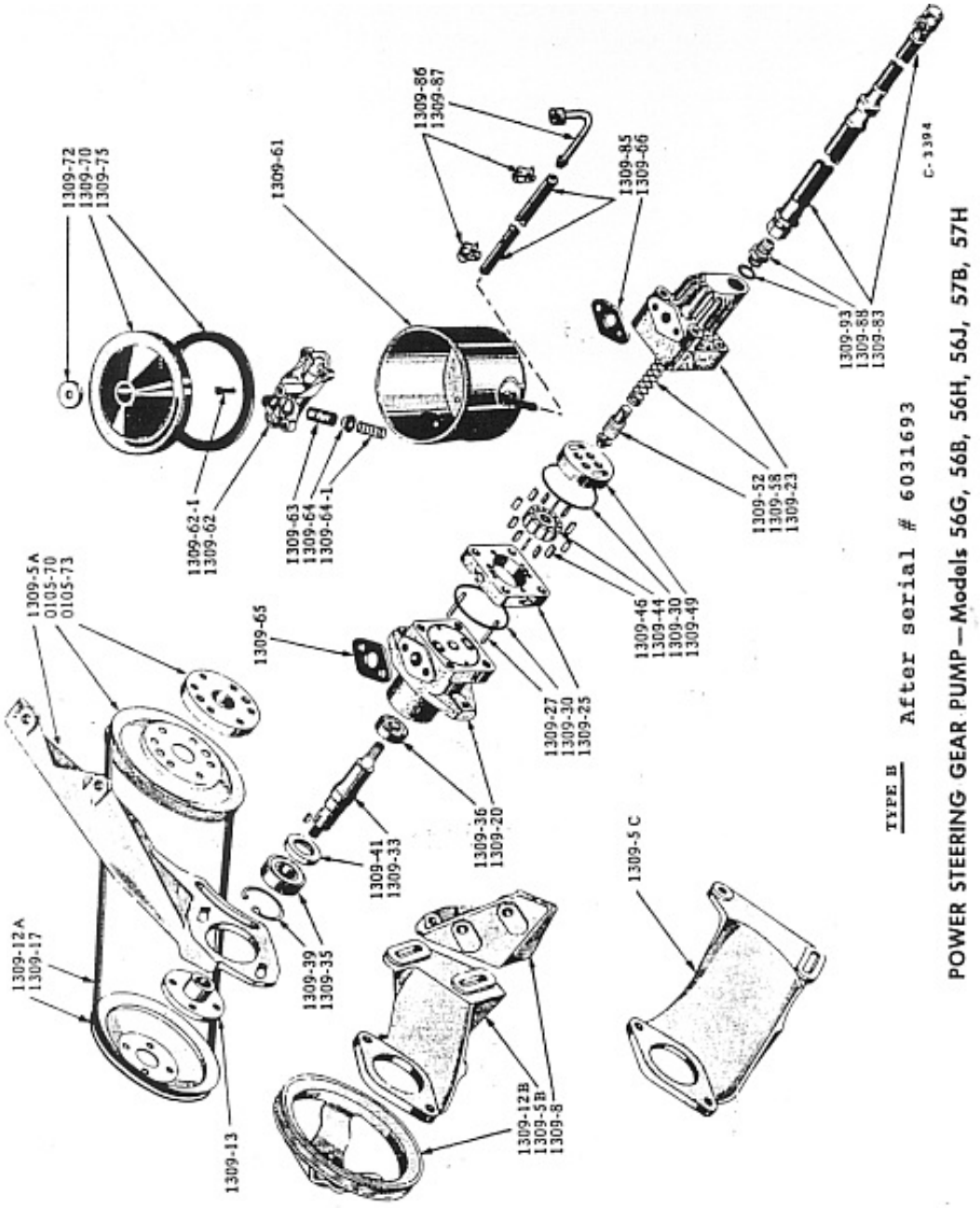
1309-72
1309-70
1309-73
1309-61
1309-86
1309-87
1309-85
1309-66
C-1394
1309-93
1309-88
1309-83
1309-62-1
1309-62
1309-63
1309-64
1309-64-1
1309-52
1309-58
1309-23
1309-5A
0105-70
0105-73
1309-65
1309-46
1309-44
1309-30
1309-49
1309-27
1309-30
1309-25
1309-36
1309-20
1309-41
1309-33
1309-5 C
1309-12A
1309-17
1309-39
1309-35
1309-12B
1309-5B
1309-8
1309-13
TYPE B
After serial # 6031693
POWER STEERING GEAR PUMP—Models 56G, 56B, 56H, 56J, 57B, 57H

ILLUST. NUMBER	PART NUMBER	PER CAR	DESCRIPTION

1301B - STEERING GEAR (Plate 13-5)

Power steering is available on LHC models only.

Saginaw Type

	1541976	1	STEERING GEAR ASSY., (less hose) (Incl. pitman arm)
	g180147	3	SCREW, to bracket 7/16" - 14 x 4-1/4"
	g120395	3	WASHER, plain 7/16"
	g120383	3	WASHER, lock 7/16"
1301-7	534301	1	BRACKET, steer. gear mounting - C-K
	41x359	1	SPACER, to frame
	g186310	2	BOLT, to frame 3/8" - 24 x 3-1/2"
	g173214	1	BOLT, to frame 3/8" - 24 x 3-1/8"
	g451010	3	NUT, hex. 3/8" - 24
	41x562	3	WASHER, lock 3/8"

1302B - STEERING GEAR HOUSING AND COVERS (Plate 13-5)

1302-3	534600	1	HOUSING, steer. gear (incls. bushing, bearing & oil seal)

For fastening parts - see steering gear assy.

	534665	1	GASKET and SEAL KIT, steer. gear - consists of:
			1 - 534609 Gasket 2 - 534631 Seal
			1 - 681328 Gasket 1 - 534670 Seal
			1 - 534628 Gasket 1 - 534675 Seal
			1 - 534616 Seal 2 - 534650 Seal
			1 - 534617 Retainer 8 - 534710 Seal
1302-12	534602	1	BUSHING, housing
(1304-20,21)	- - -	1	BEARING, shaft and worm - see group 1304B
(1304-25)	- - - -	1	OIL SEAL, shaft and worm - see group 1304B
1302-17	534606	1	COVER and BUSHING, housing side
	g179837	4	SCREW, to housing 3/8" - 16 x 3/4"
	g120382	4	WASHER, lock 3/8"
	- - - -	1	BUSHING, side cover - furnished in 534606 cover
1302-21	(No listing, *possibly should be 1304-21?*)		
1302-23	534609	1	GASKET, side cover (incl. in 534665 set)
1302-26	534610	1	COVER w/BEARING, housing end
	g179838	2	SCREW, to housing 3/8" - 16 x 7/8"
1302-26-1	534613	2	SCREW, to housing special
	g120382	2	WASHER, lock 3/8"
	- - - -	1	BEARING, shaft and worm - see group 1304B
1302-27	681328	1	GASKET, housing end cover - LHC (incl. in 534665 set)
1302-28	534645	1	COVER, housing rack
	g179837	4	SCREW, to housing 3/8" - 16 x 3/4" - C-K
	g120382	4	WASHER, lock 3/8"
1302-35	535065	1	PLUG and BREATHER, housing grease
1302-40	534647	1	VALVE, hydraulic control
1302-41	534650	2	SEAL, control valve "O" ring (incl. in 534665 set)
1302-43	534656	1	VALVE, control valve pump by-pass
1302-45	534651	5	SPRING, control valve centering
1302-47	534652	10	PLUNGER, control valve centering spring
1302-51	534653	1	COVER, w/oil seal control valve top
	g179851	3	SCREW, thru valve to housing 3/8" - 16 x 3"
	g120382	3	WASHER, lock 3/8"
1302-54	534655	1	OIL SEAL, control valve top cover

ILLUST. NUMBER	PART NUMBER	PER CAR	DESCRIPTION

1304B - STEERING GEAR POST, SHAFT AND WORM (Plate 13-5)

1304-1	533263	1	POST and FLANGE, steering - C-K (Not shown for 56J?. Shows 16G, 16H, 56G, 56B, 56H)
1304-4	533266	1	PLATE, steering post
	911882x2	4	NUT, to flange bolt 1/4" - 28
1304-7	533264	1	INSULATOR, upper, steering post
1304-8	533265	1	INSULATOR, lower, steering post
	- - - -		RING, horn contact - see group 1310A
1304-11	533251	1	FLANGE, worm shaft to steering post (incl. pins and bolts)
	533379	1	PIN, to shaft and worm 3/16" x 7/8"
1304-16	535565	1	SHAFT and WORM w/BALL NUT, steering gear
1304-20	534603	1	BEARING, upper, shaft and worm
1304-21	534612	1	BEARING, lower, shaft and worm
1304-25	534604	2	OIL SEAL, shaft and worm
1304-29	534608	2	BEARING, thrust, shaft and worm
1304-32	534619	1	NUT, lock, bearing adjusting
	- - - -	1	BALL NUT, shaft and worm - not sold separately
1304-37	534858	2	BALL SET, shaft and worm ball nut bearing - consists of: 30 balls
1304-40	534624	4	GUIDE, ball nut bearing ball
1304-44	534625	1	CLAMP, bearing ball guide
	2080x1	1	SCREW, to ball nut 1/4" - 28 x 5/16"

1305B - STEERING POST JACKET AND BRACKET (Plate 13-5)

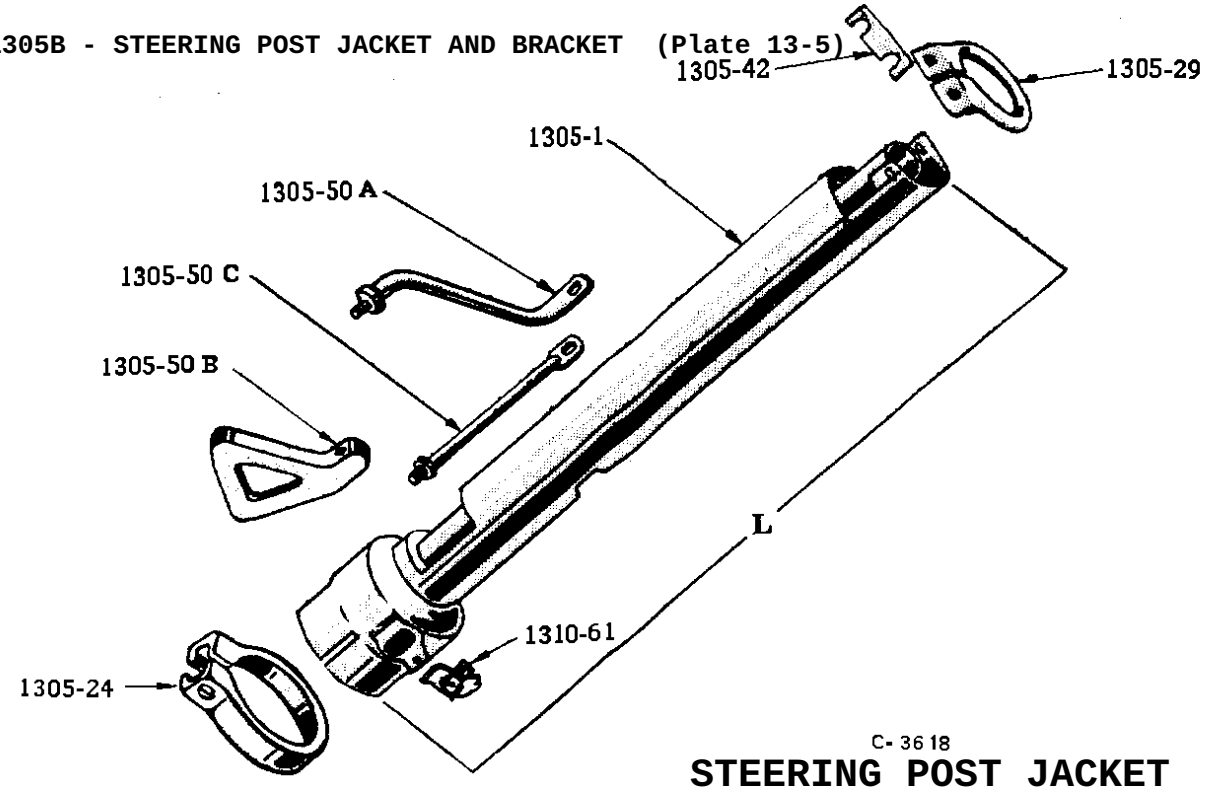

C-3618

STEERING POST JACKET

USED WITH SAGINAW POWER STEERING

				Overall Length
1305-1	533268p	1	JACKET, steering post - K (w/OD.)	30-1/4"
1305-1	1539823p	1	JACKET, steering post - K (w/AD.)	30-1/4"
(0756-31)	- - - -	1	SUPPORT, gear shift shaft - see group 0756	
(0850-31)	- - - -	1	SUPPORT, gear shift shaft - see group 0850	
(0756-52)	- - - -	1	BRACKET, gear shift shaft - see group 0756	

ILLUST. NUMBER	PART NUMBER	PER CAR	DESCRIPTION
(0850-52)	- - - -	1	BRACKET, gear shift shaft - see group 0850
1305-10	534442	1	BEARING, steering post - w/3 spoke wheel (located in gear shift upper brkt.)
1305-14	534512	1	SPRING, steering post jacket bearing
1305-15	534513	1	SEAT, steering post bearing spring
1305-24	533483p	1	CLAMP, jacket
	g181346	1	BOLT, clamping 5/16" - 24 x 1-7/8"
	g120368	1	NUT, hex. 5/16" - 24
	g138485	1	WASHER, lock 5/16"
1305-29	532994p	1	BRACKET, steering post
1305-42	533342	*	SPACER, to inst. board 1/8" thick
	652860	1	PLATE and STUDS, to inst. board
	- - - -	2	NUT and WASHER, hex. 5/16" - 18
	1540752	1	BOLT, clamping 5/16" - 18 x 3-1/4"
	g131562	1	NUT, crown 5/16" - 18
1305-50a	NOT 56J		
1305-50b	304725p	1	BRACE, bracket to cowl - LHC - C-K
1305-50c	NOT 56J		
	1957x2	2	BOLT, fastening 5/16" - 10 x 3/4" for 304725p
	1960x4	1	BOLT, fastening 5/16" - 18 x 3/4" for 304725p
	g271184	1	NUT, hex. 5/16" - 18 for 304725p
	1578x27	2	SPEED NUT 5/16" - 10 for 304725p
	g120393	1	WASHER, plain 5/16" for 304725p

ILLUST. NUMBER	PART NUMBER	PER CAR	DESCRIPTION	
1306B - STEERING GEAR CAM LEVER OR PITMAN SHAFT (Plate 13-5)				
1306-1	534615	1	SHAFT, cam lever	
1306-3	531149	1	SCREW, adjusting 7/16" - 20 x 1-11/32"	
	g272121	1	NUT, lock hex. 7/16"	
				Thickness
1306-8	531150x1	*	SHIM, shaft adjusting screw	.063
1306-8	531150x2	*	SHIM, shaft adjusting screw	.065
1306-8	531150x3	*	SHIM, shaft adjusting screw	.067
1306-8	531150x4	*	SHIM, shaft adjusting screw	.069
1306-14	534616	1	WASHER, shaft oil (incl. in 534665 set)	
1306-16	534617	1	RETAINER, shaft oil washer (incl. in 534665 set)	
	- - - -	1	RACK, power cylinder - see group 1308B	
1307B - STEERING GEAR PITMAN ARM (Plate 13-5)				
1307-1	534348	1	ARM, pitman	
	g181441	1	BOLT, clamping 1/2" - 20 x 2-3/4"	
	g120371	1	NUT, hex. 1/2" - 20	
	- - - -	1	WASHER, lock 1/2"	
1308B - POWER CYLINDER, ADAPTER, PISTON, RACK, CONTROL VALVE, PIPES, ETC. (Plate 13-5)				
			Saginaw Type	
1308-1	534627	1	CYLINDER, power	
	g179841	4	SCREW, to housing 3/8" - 16 x 1-1/4"	
	g120382	4	WASHER, lock 3/8"	
1308-5	534628	1	GASKET, power cylinder (incl. in 534665 set)	
1308-8	534629	1	ADAPTER, w/OIL SEAL, power cylinder	
1308-11	534631	2	SEAL, outer, adapter "O" ring (incl. in 534665 set)	
1308-12	634632	1	SEAL, inner, adapter "O" ring (incl. in 534665 set)	
1308-14	534634	1	PISTON, power cylinder	
	534664	1	NUT, to rod	
1308-16	534638	1	WASHER, upper	
1308-17	534639	1	WASHER, lower	
1308-20	534635	2	RING, power cylinder piston	
1308-23	534637	1	ROD, power cylinder piston to rack	
1308-24	534641	1	OIL SEAL, power cylinder rod	
1308-26	534642	1	RACK, power cylinder	
1308-27	534643	1	PIN, to rod	
1308-31	534640	1	PLATE, power cylinder rack stop	
1308-34	534644	1	GUIDE, power cylinder rack	
	g179837	2	SCREW, to cover 3/8" - 16 x 3/4"	
	g120382	2	WASHER, lock 3/8"	
				Thickness
1308-37	534646x1	*	SHIM, rack guide	.003
1308-37	534646x2	*	SHIM, rack guide	.005
1308-37	534646x3	*	SHIM, rack guide	.010
	534645	1	COVER, rack guide - see group 1302B	
1308-41	1539870	1	PIPE and NUTS, valve to lower end of cyl. - K	
1308-42	534659	1	PIPE and NUTS, valve to head end of cyl.	
1308-45	534660	4	ELBOW, valve to cylinder pipes universal fitting	
1308-48	534661	4	BOLT, fitting - special	
1308-51	534710	8	SEAL, valve to cylinder pipes elbow "O" ring (incl. in 534665 set)	
	- - - -	2	UNION, valve hose - see, union, pump to control valve hose group 1309B	
1308-55	534663	1	PIPE and NUTS, cylinder bleeder	
1308-57	g137420	2	ELBOW, cylinder bleeder pipe 3/8" x 1/8"	

ILLUST. NUMBER	PART NUMBER	PER CAR	DESCRIPTION	Type Pump
1309B - STEERING GEAR PUMP, PULLEYS, BELTS, ETC. (Plates 13-7, 8)				
	535716	1	PUMP w/RESERVOIR, hydraulic	A
			Type A pump (illust. Plate 13-5) with 2 hoses and 2 bearings on drive shaft. Used on models before car serial 6031693.	
	1540150	1	PUMP w/RESERVOIR, hydraulic	B
			Type B pump (illust. Plate 13-6) with 1 hose and 2 bearings on drive shaft used on and after car serial 6031693.	
	g179841	2	SCREW, to support 3/8" - 16 x 1-1/4" less A.C.	
	g120394	2	WASHER, plain 3/8" less A.C.	
	g120382	2	WASHER, lock 3/8" less A.C.	
	534712	1	GASKET SET, pump - consists of:	A
			1 - 534701 Gasket 1 - 534705 Gasket	
			1 - 534702 Gasket 1 - 534707 Gasket	
			4 - 534703 Spacer 2 - 534687 Seal	
	1541294	1	GASKET SET, pump - consists of:	B
			2 - 1541310 Gasket 1 - 1541311 Gasket	
			2 - 534687 Seal	
	535512	1	REPAIR KIT, pump - consists of:	A
			1 - 534681 Bearing 1 - 534880 Ring	
			1 - 534682 Bearing 1 - 534688 Rotor	
			1 - 535527 Seal 1 - 534074 Vane Kit	
1309-5A	NOT 56J			
1309-5B	NOT 56J			
1309-5C	1539912	1	SUPPORT, pump	
	g179840	2	SCREW, to cyl. head 3/8" - 16 x 1-1/8"	
	g120394	2	WASHER, plain 3/8"	
	g120382	2	WASHER, lock 3/8"	
1309-8	NOT 56J			
1309-12A	NOT 56J			
1309-12B	534296	1	PULLEY, pump drive	B
1309-12B	(No listing for Type A pump on 56J)			
	g124543	1	KEY, to shaft 1/8" x 1/2"	
	g114496	1	NUT, to shaft 1/2" - 20	
	41x133	1	WASHER, plain 1/2"	
	- - - -	1	WASHER, lock 1/2"	
1309-13	NOT 56J			
1309-17	1540139	1	BELT, pump drive	
1309-20	534679	1	BODY, pump	A
1309-20	1541296	1	BODY, pump	B
1309-23	534699	1	COVER, pump body	A
	g179848	2	SCREW, to body 3/8" - 16 x 2-1/4"	
	g186282	2	SCREW, to body 3/8" - 16 x 3-1/4"	
1309-23	1541308	1	COVER, pump body	B
	g186279	2	SCREW, to body 3/8" - 16 x 3-1/8"	
	g186277	2	SCREW, to body 3/8" - 16 x 2-3/8"	
1309-25	534880	1	RING, pump	A
1309-25	1541302	1	RING, pump	B
1309-27	534686	2	PIN, dowel	A
1309-27	1541303	2	PIN, dowel	B-C-D
1309-30	534687	2	SEAL, pump ring to body and cover (incl in gasket set)	
1309-33	535966	1	SHAFT, pump drive	A
			Two types of oil seals were used, the first type identified as vickers No. 1G3,168,083 is used with 534680 shaft and the second type identified as C/R No. 5681410 (neoprene) is used with 535966 shaft.	
1309-33	1541298	1	SHAFT, pump drive	B
1309-35	534682	1	BEARING, front, pump drive shaft	A-B

ILLUST. NUMBER	PART NUMBER	PER CAR	DESCRIPTION	
1309-36	534681	1	BEARING, rear, pump drive shaft	A
1309-36	1541299	1	BEARING, rear, pump drive shaft	B
1309-39	534683	1	RETAINER, front bearing	A-B
1309-41	535527	1	OIL SEAL, pump drive shaft	A
			Two types of oil seals were used, the first type identified as vickers No. 1G3,168,083 is used with 534680 shaft and the second type identified as C/R No. 5681410 (neoprene) is used with 535966 shaft.	
1309-41	1541300	1	OIL SEAL, pump drive shaft (less air cond.)	B-C
1309-44	534688	1	ROTOR, pump	A
1309-44	1541304	1	ROTOR, pump (less air cond.)	B-C-D
1309-45	535074	1	VANE KIT, pump rotor consists of 12 vanes (incl. IN 535512 KIT)	A
1309-45	1541305	1	VANE KIT, pump rotor - consists of: 10 vanes (less air cond.)	B-C-D
1309-46	- - - -	*	VANE, pump rotor (incl. in vane kit)	
1309-49	534691	1	PLATE, pump pressure	A
1309-49	1541306	1	PLATE, pump pressure	B
1309-52	534692	1	VALVE ASSY., pump pressure control	A
1309-52	1541307	1	VALVE ASSY., pump pressure control	B
1309-58	534694	1	SPRING, pressure control valve	A
1309-58	1541319	1	SPRING, pressure control valve	B
1309-61	534882	1	RESERVOIR, pump	A
1309-61	1541309	1	RESERVOIR, pump (less air cond.)	B-C-D
	534726	1	SCREW and WASHER, to body & cover (for 534882)	A
1309-62	1541312	1	MANIFOLD, pump reservoir (less air cond.)	B-C-D
1309-62-1	1541315	4	SCREW, thru reservoir to body and cover (special)	
1309-63	1541316	1	SCREEN, pump reservoir (less air cond.)	B-C-D
1309-64	1541317	1	RETAINER, reservoir screen (less air cond.)	B-C-D
1309-64-1	1541318	1	SPRING, reservoir screen (less air cond.)	B-C-D
1309-65	534701	1	GASKET, to body - cork (incl. in 534712 set)	A
1309-66	534702	1	GASKET, to cover - cork (incl. in 534712 set)	
1309-68	534703	4	SPACER, to gasket (incl. in 534712 set)	
1309-65-66	1541310	2	GASKET, to body and cover - rubber (incl. in 1541294 set - less air cond.)	B-C-D
1309-70	534704	1	COVER, pump reservoir	A
	g186284	1	SCREW, cover 3/8" - 16 x 3-3/4"	
1309-73	534715	1	WASHER, plain - special	
	g110730	1	WASHER, lock 3/8"	
1309-70	1541313	1	COVER, pump reservoir (less air cond.)	B-C-D
	g100128	1	SCREW, cover 5/16" - 18 x 3"	
1309-72	1541314	1	GASKET, screw	
1309-75	534705	1	GASKET, pump reservoir cover (incl. in 534712 set)	A
1309-75	1541311	1	GASKET, pump reservoir cover (incl. in 1541294 set - less air cond.)	B-C-D
1309-78	534706	1	GUIDE, reservoir cover bolt	A
1309-79	534707	1	GASKET, reservoir cover bolt guide (incl. in 534712 set)	A
1309-83	534667	1	HOSE, pump to control valve pressure-C-K (Type A pump (illust. Plate 13-5) with 2 hoses and 2 bearings on drive shaft used on models before car serials 6031693)	A
1309-83	1540103	1	HOSE, pump to control valve pressure (Type B pump (illust. Plate 13-6) with 1 hose and 2 bearings on drive shaft used on and after car serial 6031693). (less air cond.)	B
1309-85	1540527	1	HOSE, pump to control valve return	A-B
1309-85	1541403	1	HOSE, pump to control valve return (less air cond.)	B-C
1309-86	1541400	*	CLAMP, hose (for 1541403)	
1309-87	1541404	1	PIPE and NUT, pump to control valve return hose	B-C

ILLUST. NUMBER	PART NUMBER	PER CAR	DESCRIPTION
1309-88	534674	1	UNION, pressure hose, pump end (less air cond.)
1309-89	534669	1	UNION, pressure hose, valve end (illust. plate 13-5)
1309-90	534709	1	UNION, return hose, pump end
1309-91	534674	1	UNION, return hose, valve end (less air cond.) (illust. plate 13-5)
1309-93	534675	1	SEAL, pressure hose union, pump end
1309-94	534670	1	SEAL, pressure hose union, valve end (illust. plate 13-5)
1309-95	534710	1	SEAL, return hose union, pump end
1309-96	534675	1	SEAL, return hose union, pump end (less air cond.) (illust. plate 13-5)
1309-99	526600x2	1	CLIP, hose to housing - C-K
	534534	1	CLIP, hose to housing - C-K

1310B - STEERING WHEEL, HORN PUSH BUTTON, RING CABLE, ETC. See Group 1310A

When installing the following wheels on RHC cars with directional signals rotate signal cam 146° clockwise.

				Type Wheel Type Wheel
1310-1	1540647	1	WHEEL, steer. - white - C-K	B
1310-3	196821	1	NUT, to post 13/16" - 20	B
1310-4	534451	1	LOCK, plate	B
1310-23	1539735	1	CAP, horn ring	B
1310-25	532902	1	RING, retainer - rubber	B
1310-27	532888	1	HORN RING, w/contact cap	B
	1721x27	3	SCREW, to wheel No. 8 x 1-3/8"	
	524083	3	WASHER, insulating	
	g131015	3	WASHER, plain No. 8	
1310-29	532201	1	SPRING, push button (less power steer.)	B
1310-29	533462	1	SPRING, push button (w/ power steer.)	B
1310-33	196673	1	CUP, push button spring (less power steer.)	B
1310-33	533463	1	CUP, push button spring (w/power steer.)	B
1310-36	520411	1	PAD, push button shock - rubber	B
1310-37	519180	3	SPACER, push button shock pad	B
1310-40	522202	1	CAP, push button contact	B
	g448005	3	SCREW, to ring No. 6 x 1/2" (for 522202)	B
	531846	3	WASHER, insulating (for 522202)	B
	522774	3	WASHER, insulating (for 522202)	B
1310-44	1539065	1	CABLE, push button (less power steering)	
1310-46	524757	1	TERMINAL, upper	
1310-47	198667	1	TERMINAL, lower - push type	
1310-44	533468	1	CABLE, push button - C-K (w/power steering)	
1310-46	524757	1	TERMINAL, upper	
1310-47	533766	1	TERMINAL, lower - push type	
1310-48	190849	2	BUSHING, push button cable	B
1310-50	194574	1	FERRULE, push button cable (less power steering)	B
1310-50	534135	1	FERRULE, push button cable (w/power steer.)	B
1310-52	192545	1	CONNECTOR, push button cable (less power steering)	
1310-55	533465	1	RING, push button cable contact (w/power steer.) (illust. plate 13-5)	
1310-58	533327	1	INSULATOR, cable contact ring (with/power steer.) (illust. plate 13-5)	
1310-61	533441	1	BRUSH, cable contact ring (w/power steer.) (see illust. group 1305B)	
	1501x21	1	SCREW, to jacket No. 10 x 1/4"	
	531089	1	RECEPTACLE, cable contact ring brush (w/power steer.)	
	531090	1	HOUSING, cable contact ring brush receptacle (w/power steering)	
	533782x3	1	CABLE, brush to chassis cables - C-K	

ILLUST. NUMBER	PART NUMBER	PER CAR	DESCRIPTION	Length
1312B - STEERING REACH ROD OR DRAG LINK (plate 12-3)				
1312-1A	1539894	1	ROD and ENDS, reach - LHC - C-K	14-5/8"
1312-1B	NOT 56J			
1312-5	3036x3	1	GREASE FITTING, front	
1312-6	g191350	1	GREASE FITTING, rear	
	g102647	*	NUT, ball stud hex. 1/2" - 20	
	- - - -	*	COTTER 3/32" x 1"	
1312-16	530202	*	SEAL, reach rod end grease	

* - Use as required
▲ - Not available

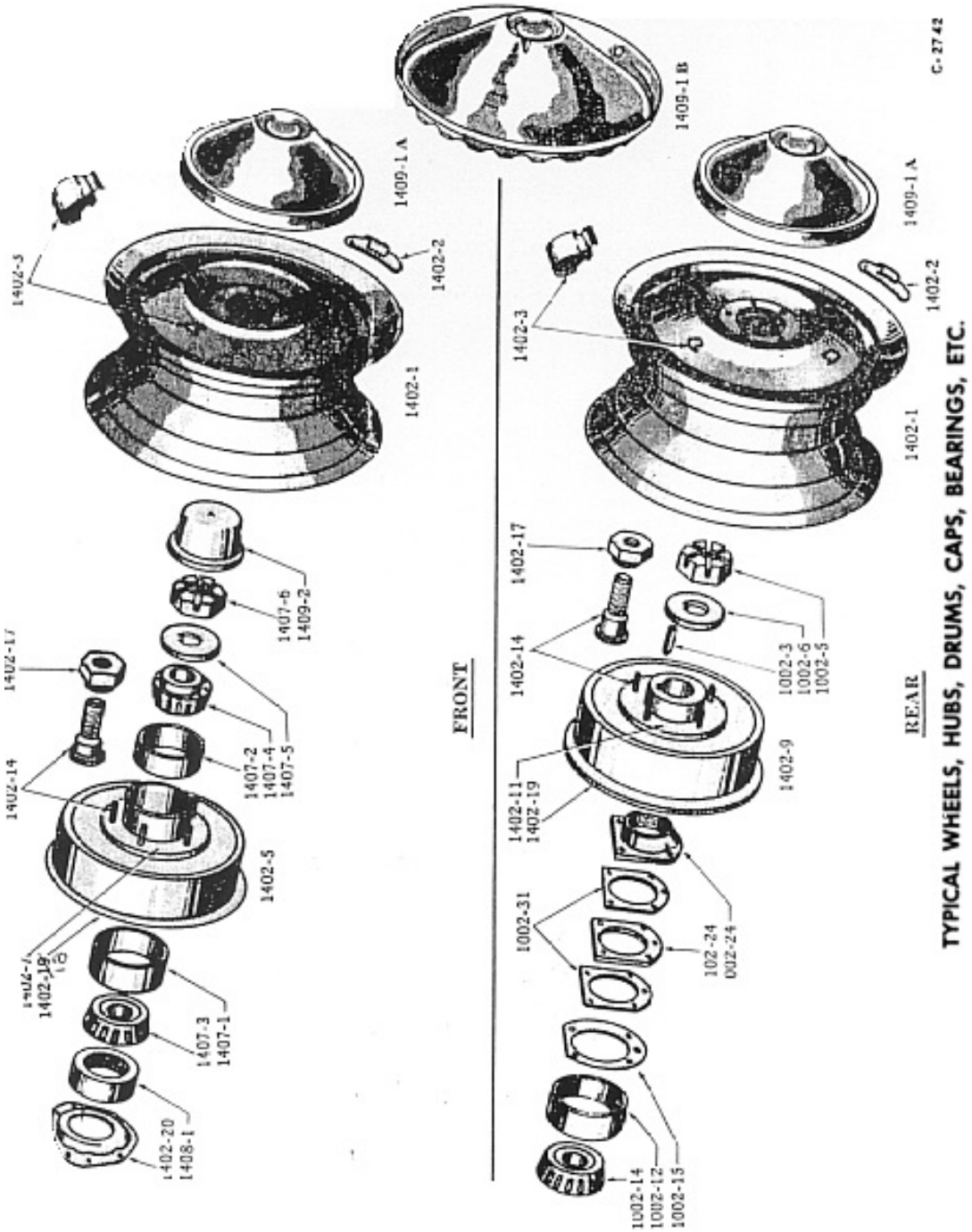
1409-1 A
1402-2
1402-3
1402-1
1407-6
1409-2
1402-17
1402-14
1407-2
1407-4
1407-5
1402-5
1402-19
1407-3
1407-1
1402-20
1408-1
FRONT
1409-1 B
1409-1 A
1402-3
1402-2
1402-1
1402-17
1002-3
1002-6
1002-5
1402-14
1402-9
1402-11
1402-19
1002-31
102-24
002-24
1002-14
1002-12
1002-13
REAR
C-2742
TYPICAL WHEELS, HUBS, DRUMS, CAPS, BEARINGS, ETC.

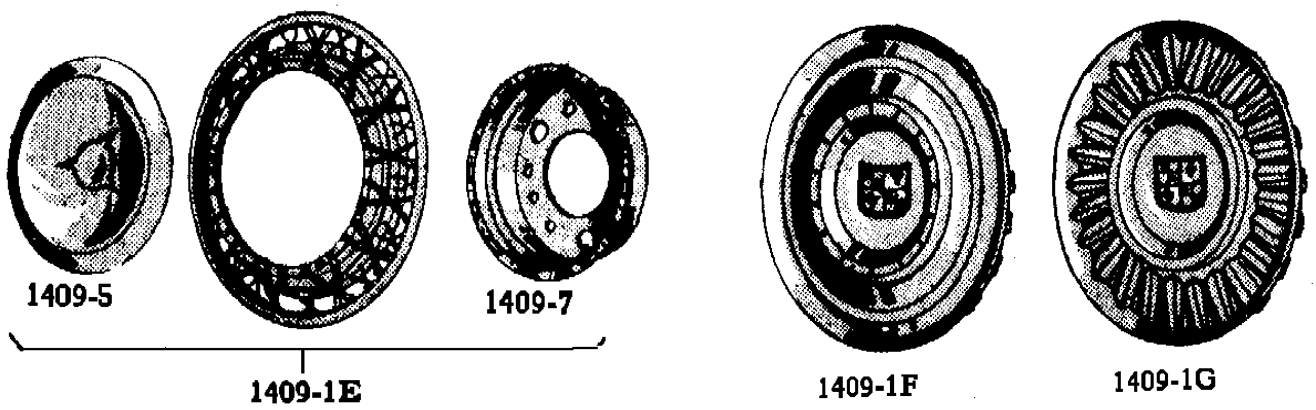

ILLUST. NUMBER	PART NUMBER	PER CAR	DESCRIPTION	Wheel Size
1402 - WHEELS, HUBS AND DRUMS (Plate 14-1)				
			15" wheels are standard on all models	
1402-1	537540p	5	WHEEL, prime - U.S.A.	15 x 5.00K
1402-2	190983	*	WEIGHT, wheel balance - 1 oz.	
1402-2	190984	*	WEIGHT, wheel balance - 2 oz.	
1402-2	190985	*	WEIGHT, wheel balance - 3 oz.	
1402-3	526646	*	SPRING, hub cover retaining	
	536701	*	VALVE ASSY., tubeless tire	
			Hubs and Drums	
			Front wheel hub and drum assemblies include bearing cups and studs.	
1402-5	1539460	1	HUB and DRUM, right front	
	1539461	1	HUB and DRUM, left front	
1402-7	1539455	2	HUB and CUPS, front wheel	
1402-9	1539462	1	HUB and DRUM, right rear	
	1539463	1	HUB and DRUM, left rear	
1402-11	533901	2	HUB ONLY, rear wheel	
1402-14	196930	10	STUD, right wheel hub	
	196931	10	STUD, left wheel hub	
1402-17	196308	10	NUT, right hub stud	
	196309	10	NUT, left hub stud	
1402-18	1539459	2	DRUM, front wheel brake	
1402-19	1539464	2	DRUM, rear wheel brake	
1402-20	529085	2	CATCHER, front brake drum oil	
1407 - FRONT WHEEL BEARINGS, NUTS, ETC. (Plate 14-1)				
1407-1	473259	2	CUP, inner bearing	
1407-2	473257	2	CUP, outer bearing	
1407-3	473258	2	CONE and ROLLERS, inner bearing - U.S.A.	
1407-4	473256	2	CONE and ROLLERS, outer bearing - U.S.A.	
1407-5	1539026	2	WASHER, bearing nut lock - U.S.A.	
1407-6	1543223	2	NUT, bearing lock 3/4" - 16	
	- - - -	2	COTTER, 1/8" x 1-1/2"	

ILLUST. NUMBER	PART NUMBER	PER CAR	DESCRIPTION
1408 - FRONT WHEEL GREASE WASHERS (Plate 14-1)			
1408-1	1539027	2	WASHER and RETAINER, front wheel grease - U.S.A.
1409 - WHEEL HUB COVERS OR CAPS (Plate 14-2)			
1409-1B	519116	4	CAP, hub - except W1-F1-D1 - 15" equip. - U.S.A.
1409-1E	▲AC-2425	4	CAP and DISC, Hub (wire wheel) 15" equip.
1409-1F	AC-2738	4	CAP and DISC, hub (full disc) 15" equip.
1409-1G	AC-2799	4	CAP and DISC, hub (spoke type) 15" equip.
1409-2	1539025	2	CAP, front wheel hub grease
1409-5	▲534084	4	COVER, hub (for AC-2425 wire wheel)
1409-7	534515	4	RETAINER, cap & disc (for AC-2425 wire wheel)
	g134420	12	BOLT, to disc 1/4" - 20 x 5/8"
	1542x28	12	SPEED NUT 1/4"
	534127	4	EXTENSION, tire valve (for AC-2425 wire wheel)
1413 - REAR COMPARTMENT WHEEL CARRIER (Plate 23-33)			
1413-1	264388	1	CLAMP, spare wheel (disc type) - C-K-D-P
1413-6	1296x614	1	BOLT, spare wheel hold down 1/2" - 13 x 6-1/4" - C-K
1413-9	1312817	1	WING NUT, 3/8" - 16
	g120396	1	WASHER, plain

* - Use as required
▲ - Not available

TYPICAL FRAME - C-K

From page 448 - Chassis Parts Manual

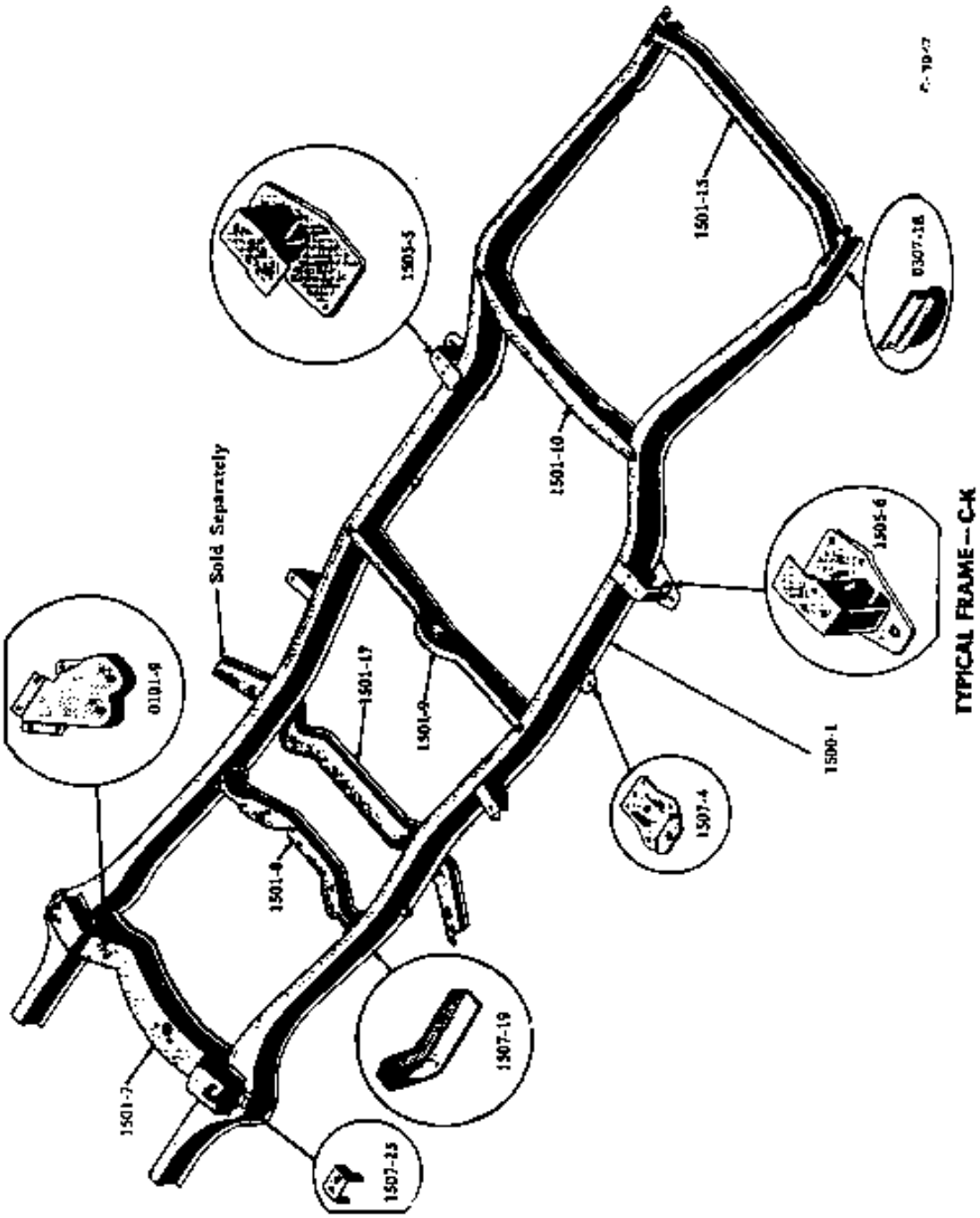

FRONT and REAR SPRINGS

From page 449 - Chassis Parts Manual

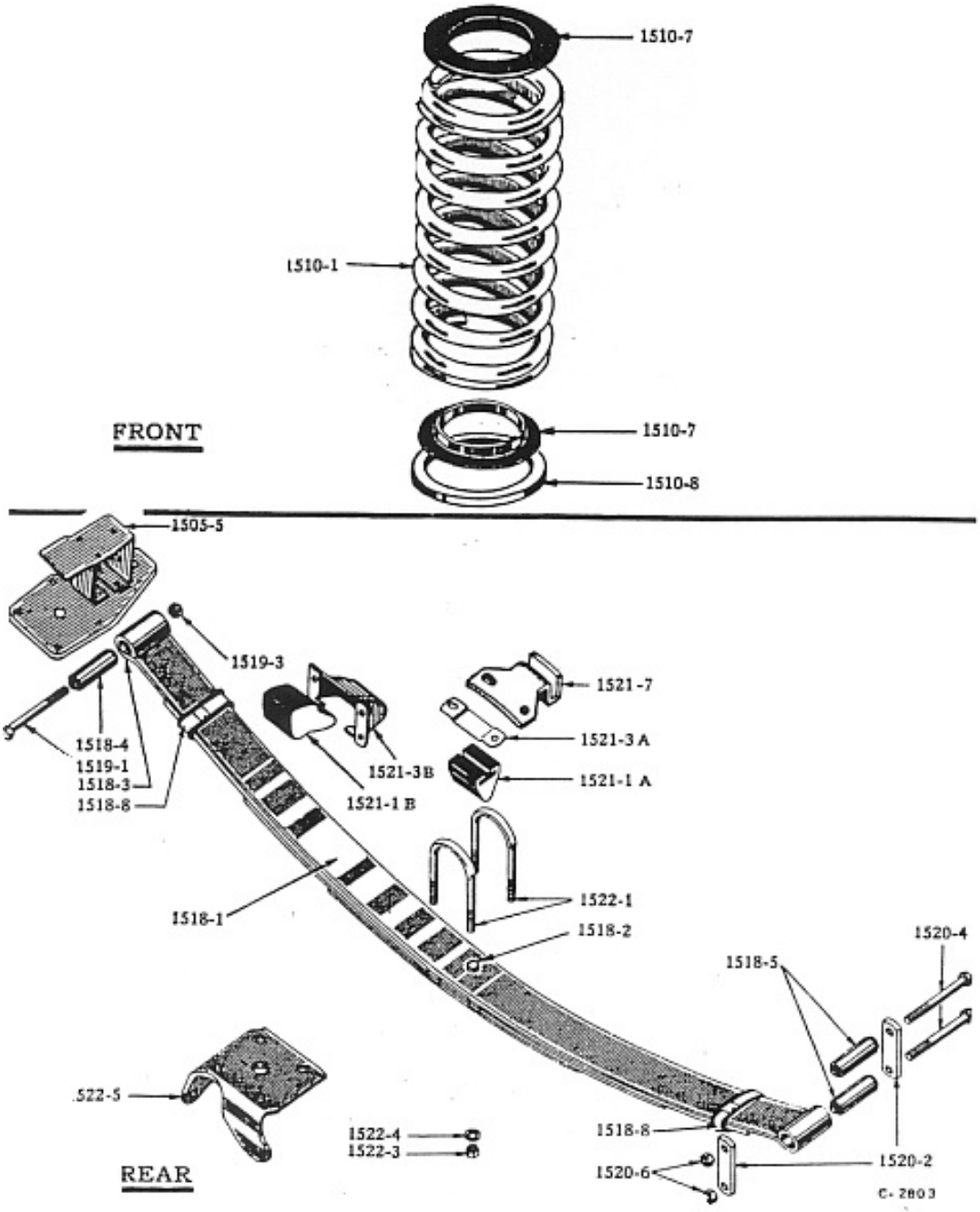

FRONT and REAR SPRINGS

ILLUST. NUMBER	PART NUMBER	PER CAR	DESCRIPTION
1500 - FRAME ASSEMBLY (Plate 15-2)			
			Frames are furnished complete with body mounting brackets and rear spring front hangers.
1500-1	1539088	1	FRAME-K-LHC - incls. engine front supt. bracket
1501 - FRAME CROSS MEMBERS (Plate 15-2)			
1501-7	1542978	1	MEMBER, front cross
	- - - -	4	RIVET, to frame 3/8" x 7/8"
1501-8	1539366	1	MEMBER, engine rear supt. cross - K
	g181385	6	BOLT, to frame 3/8" - 24 x 3" C-K
	g103026	6	NUT, hex. 3/8" - 24 C-K
	41x570	6	WASHER, plain 3/8" C-K
	g120382	6	WASHER, lock 3/8" C-K
1501-9	531916	1	MEMBER, prop. shaft supt. cross
	- - - -	4	RIVET, to frame 5/16" x 3/4"
1501-10	1541839	1	MEMBER, rear shock absorber cross
			When used on a 1955 or 1956 model it is necessary to enlarge the two front holes in the rear shock absorber frame cross member from 29/64" to 21/32".
	- - - -	4	RIVET, to frame 5/16" x 3/4"
1501-15	531951	1	MEMBER, gas tank cross - except D-P
	- - - -	8	RIVET, to frame 5/16" x 7/8"
1501-17	1539043	1	MEMBER, body front pillar supt. cross - K
	g181360	8	BOLT, to frame 3/8" x 24 x 3/4"
			(should it be 3/8" - 24 x 3/4"?)
	g451010	8	NUT, hex. 3/8" - 24
1505 - REAR SPRING HANGERS (Plates 15-2, 3)			
1505-5	532108	1	HANGER w/BODY BRACKET, front right, rear spring
1505-6	532109	1	HANGER w/BODY BRACKET, front left, rear spring
	- - - -	*	RIVET, to frame 3/8" x 1"
1507 - FRAME MISCELLANEOUS ATTACHMENTS (Plate 15-2)			
1507-4	531215	4	BRACKET, frame body mounting - except C-J
	- - - -	16	RIVET, to frame 5/16" x 13/16" - except C-J
1507-19	533195p	1	SHIELD, inner, pedal splash - C-K - LHC
	g177999	2	SCREW, to frame No. 14 x 1/2"
	- - - -	*	SHIELD, pedal protector - see group 2338
1507-25	529332	2	BRACKET, suspension upper arm bumper - welded
1510 - FRONT SPRINGS (Plate 15-3)			
			Part No. of coil springs is stamped on the end coil.
1510-1	526124	2	SPRING, front - std.
1510-1	526125	2	SPRING, front - HD.
1510-7	526249	4	INSULATOR, front spring - rubber
1510-8	526830	1	SPACER, front spring - left side
1518 - REAR SPRINGS (Plate 15-3)			
1518-1	1539487	2	SPRING w/BUSHINGS, rear - std. exc. D (less air cond.)
1518-1	536513	2	SPRING w/BUSHINGS, rear - HD. - except D
1518-2	104x252	2	BOLT, center 3/8" - 24 x 1-3/4" - std. - except D
1518-2	104x253	2	BOLT, center 3/8" - 24 x 1-7/8" - HD. - except D
	g120369	2	NUT, hex. 3/8" - 24
1518-3	1539486	2	LEAF, rear spring main (No. 1) std. - except D
1518-3	536516	2	LEAF, rear spring main (No. 1) HD. - except D

ILLUST. NUMBER	PART NUMBER	PER CAR	DESCRIPTION	
1518-4	1539484	2	BUSHING, front, rear spring - std. 1-1/2" O.D. (except D-P)	
1518-4	536517	2	BUSHING, front, rear spring - HD. 1-3/8" O.D. (exc. D-P)	
1518-5	527987	4	BUSHING, rear, rear spring 7/8" O.D.	
				Length
	530431x3	2	INSERT, rear spring leaf plastic liner or	45-3/4"
	530431x4	2	INSERT, rear spring leaf plastic liner or	35"
	530431x5	2	INSERT, rear spring leaf plastic liner or	25"
1518-8	536757	4	CLIP KIT, rear spring rebound - consists of: 1 - - - - - Strap 1 - - - - Liner	

1519 - REAR SPRING BOLT (Plate 15-3)

1519-1	1296x607	2	BOLT, front, rear spring 7/16" - 20 x 4"
1519-3	g272600	2	NUT, lock 7/16" - 20
	- - - -	2	BUSHING, rear spring front bolt - see spring Bushing group 1518

1520 - REAR SPRING SHACKLE (Plate 15-3)

1520-2	529169	2	SHACKLE, right, rear spring - LHC
1520-2	529168	2	SHACKLE, left, rear spring - LHC
1520-4	g181415	4	BOLT, shackle 7/16" - 20 x 4"
1520-6	g272600	4	NUT, lock 7/16 - 20
	- - - -	4	BUSHING, rear spring shackle - see spring bushing - Group 1518

1521 - REAR SPRING BUMPER (Plate 15-3)

1521-1A	1540508	2	BUMPER, rear axle - except D-P
1521-1B	532406	2	BUMPER, rear spring
1521-3A	532118p	2	RETAINER, rear axle bumper
1521-3B	532407	2	RETAINER, rear spring bumper
	g173741	*	SCREW, to frame 5/16" - 18 x 1/2"
	g174907	*	SCREW, to frame 1/4" - 20 x 1/2"
1521-7	NOT 56J		

1522 - REAR SPRING CLIP, PLATE AND SEAT (Plate 15-3)

				Length
1522-1	535733	4	CLIP or U BOLT, rear spring - HD.	5-3/4"
1522-3	674899	8	NUT, hex. 7/16" - 20 (for 535733)	
1522-4	g136857	8	WASHER, shakeproof 7/16"	
1522-5	532076	1	PLATE, right, rear spring clip for 535733 illust. Group 1525	
1522-6	532077	1	PLATE, left, rear spring clip for 535733 illust. Group 1525	

1525 - REAR STABILIZER (NOT 56J)

* - Use as required

▲ - Not available

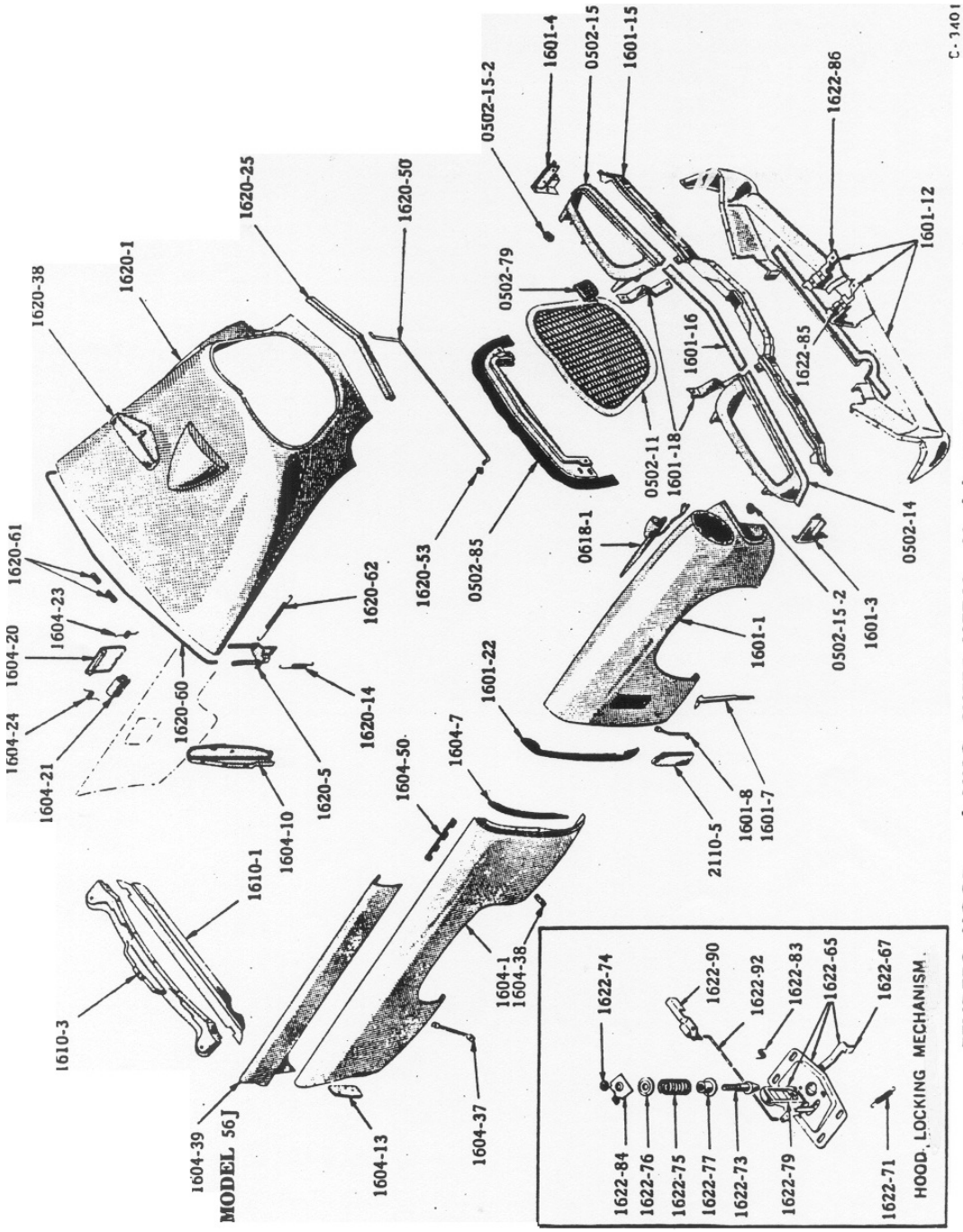

FENDERS, HOOD and MISC. SHEET METAL—Models 56G, 56B, 56H, 56J—C-K

FRONT FENDER DETAILS - ALL 1956 MODELS

From page 468 - Chassis Parts Manual

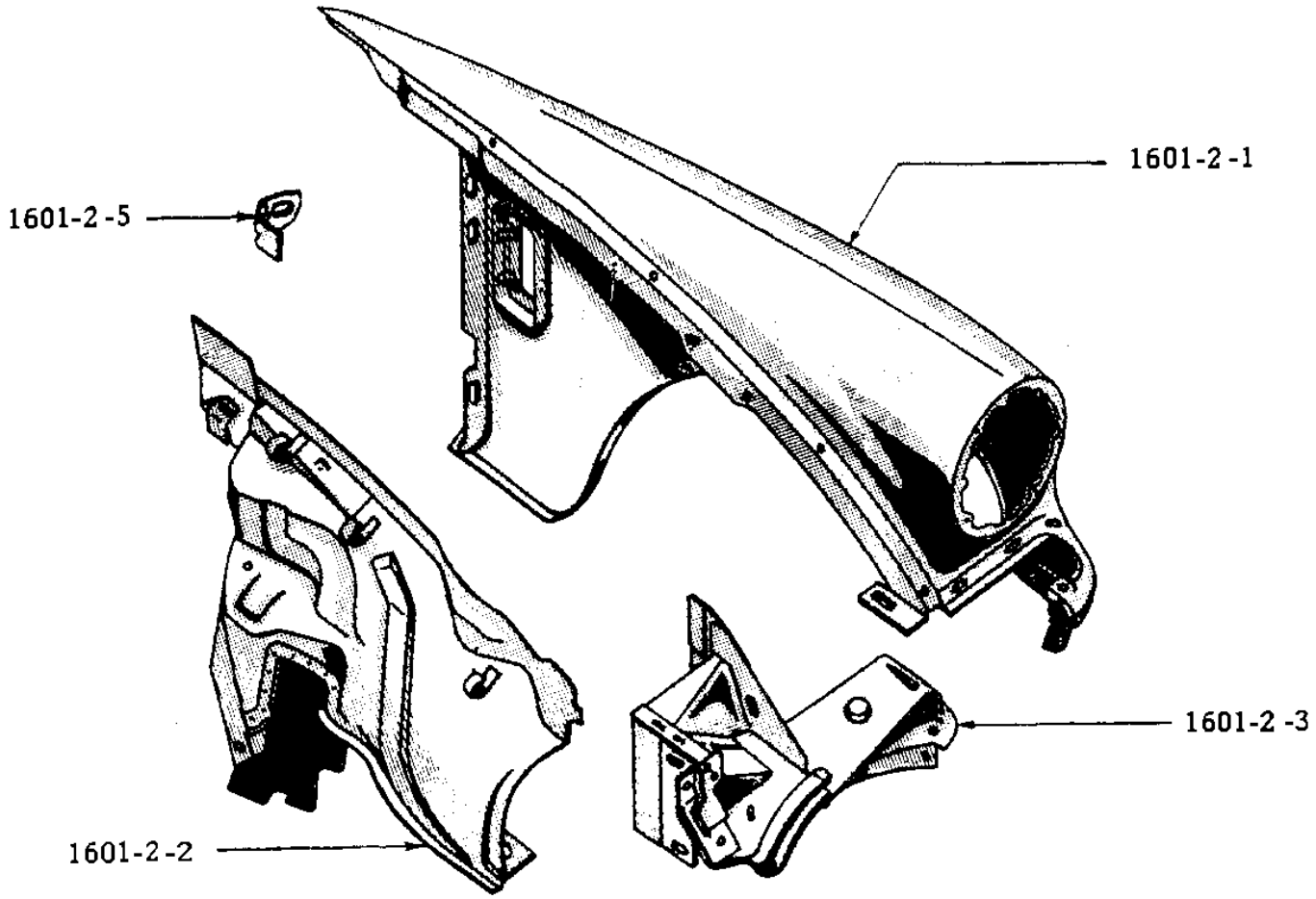

FRONT FENDER DETAILS

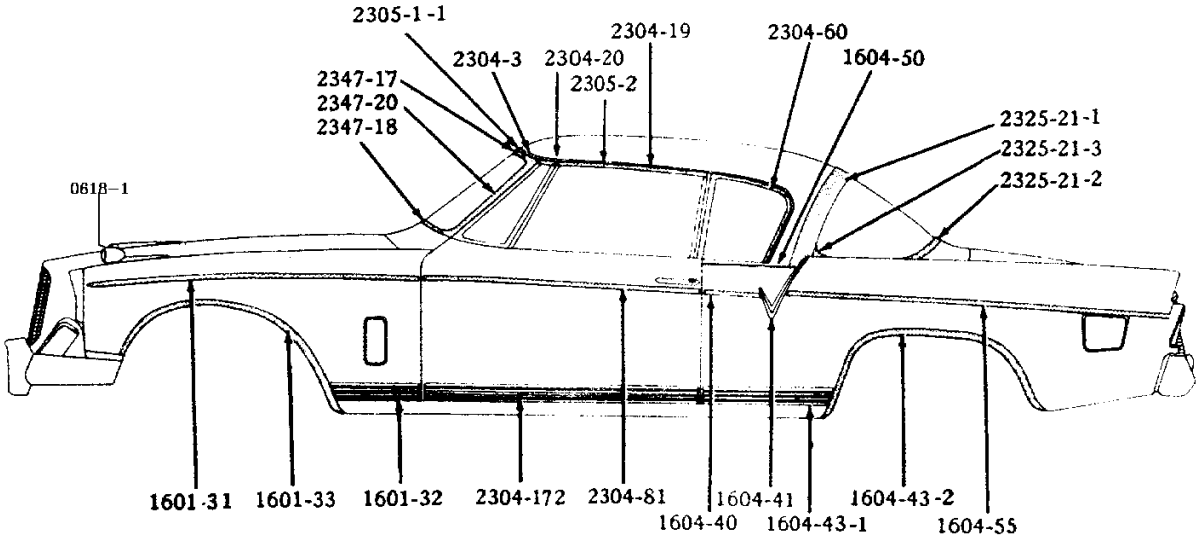

MODEL 56J

1601 - FRONT FENDERS (Plates 16-4, 10, 15)

1601-1	1314456p	1	FENDER w/APRON, right C-K
	1314457p	1	FENDER w/APRON, left C-K
1601-2-1	303040p	1	FENDER less APRON, right - C-K
1601-2-1	303041p	1	FENDER less APRON, left - C-K
1601-2-2	1323188p	1	APRON, right fender - C-K
1601-2-2	1323189p	1	APRON, left fender - C-K
1601-2-3	1314452p	1	AIR DEFLECTOR, right fender side - C-K
1601-2-3	1314453p	1	AIR DEFLECTOR, left fender side - C-K
1601-2-5	306598	1	BRACE, right fender to apron - C-K
1601-2-5	306599	1	BRACE, left fender to apron - C-K
1601-3	1312338p	1	EXTENSION, right fender lower - C-K
1601-4	1312339p	1	EXTENSION, left fender lower - C-K
	g161645	6	SCREW, fastening No. 10 - 12 x 1/2"
	- - - -	2	LID and DEFLECTOR, shroud ventilator - see Group 2310
1601-7	304650p	1	BRACE, right apron to fender - C-K
	304651p	1	BRACE, left apron to fender - C-K
	1957x4	2	BOLT and WASHER, to fender 5/16" - 10 x 7/8"
	1578x35	2	SPEED NUT 5/16"
1601-8	303651p	2	BRACE, fender to body - C-K
	1904x10	2	BOLT and WASHER, to fender 1/4" - 20 x 5/8"
	g120375	2	NUT, hex. 1/4" - 20
	g120380	2	WASHER, lock 1/4"
	1906x16	1	SCREW and WASHER, to cowl 1/4" - 20 x 3/4" (right)
1601-11-1	g180018	2	BOLT, to fender 1/4" - 20 x 5/8"
	g271172	2	NUT, and WASHER, hex. 1/4" - 20
	g120392	2	WASHER, plain 9/32"
1601-12	1312083p	1	PANEL, lower air intake - C-K
			(incls. hood lock plate brackets)
	1957x4	12	BOLT and WASHER, fastening 5/16" - 10 x 7/8"
	1578x35	12	SPEED NUT 5/16"
	1905x18	2	SCREW, to core support 5/16" - 18 x 1" - C-K
	1578x3	4	SPEED NUT 5/16"
1601-15	1314164p	1	DEFLECTOR, fender lower air - C-K
	1957x4	2	SCREW, to side air deflector 5/16" - 10 x 7/8"
	1578x45	2	SPEED NUT 5/16"
1601-16	1312079	1	MOULDING, fender lower air deflector - C-K

ILLUST. NUMBER	PART NUMBER	PER CAR	DESCRIPTION
	g161645	5	SCREW, to deflector No. 10 - 12 x 1/2"
1601-18	1312286p	2	BRACE, lower to side air deflector - C-K
	1957x4	4	SCREW and WASHER, fastening 5/16" - 10 x 7/8"
	1578x35	4	SPEED NUT 5/16"
1601-19	274974	3	PLUG, fender apron climatizer bolt hole - C-K
	g177999	1	PLUG, fender apron starter solenoid hold
1601-22	309994	*	SHIM, fender to cowl 1/8" - C-K
1601-22	309993	*	SHIM, fender to cowl 3/16" - C-K
	298340	*	SHIM, front, fender to frame 1/8"
	298341	*	SHIM, front, fender to frame 1/4"
	1545x2	8	CLIP, retainer
	311269x1	*	ANTI-SQUEAK, fender to cowl top panel 1/8" - C-K
	311269x2	*	ANTI-SQUEAK, fender to cowl top panel 3/16" - C-K
	g161373	4	SCREW, to cowl No. 6 x 1/2"
			Fender Mouldings
1601-31	1312502	1	MOULDING, right, front fender side - C-K
1601-31	1312503	1	MOULDING, left, front fender side - C-K
	1314713	2	CLIP and SEAL, front (for 1312502 & 1312503)
	1314710	10	CLIP and SEAL, center & rear (for 1312502 & 1312503)
1601-32	1312534	1	MOULDING, right, front fender curb - K
	1312535	1	MOULDING, left, front fender curb - K
	1526x47	6	SCREW, to fender No. 6 x 1/2"
1601-33	1314792	1	MOULDING, right, fender wheel opening - K7
	1314793	1	MOULDING, left, fender wheel opening - K7
	1314795	12	CLIP and STUD, to fender
	g271166	12	NUT and LOCK WASHER, hex. No. 10 - 24
1601-36	- - - -	2	ORNAMENT, front fender top - C-K (see parking and directional lamp - Group 0617)
1601-38	1314806w	2	ORNAMENT, front fender side - "V8" - C-K
	1654149	6	CLIP to fender
	1314300w	2	NAME PLATE, front fender "Studebaker" - Chrome
	1651x8	10	CLIP, retainer - C-K
	- - - -	2	SPLASHGUARD, fender apron rear (cut from 1/8" tire stock)
	531094	1	RETAINER, to frame

1602 - FRONT FENDER BOLTS, NUTS AND WASHERS

	1960x3	4	SCREW and WASHER, apron to frame 3/8" - 24 x 1-1/2"
	g120369	4	NUT, hex. 3/8" - 24
	41x557	4	WASHER, plain 3/8"
	g120382	4	WASHER, lock 3/8"
	1501x30	2	SCREW and WASHER, side air deflector to core support 5/16" - 18 x 5/8" - C-K
	1906X25	2	SCREW and WASHER, fender to cowl side panel 5/16" - 18 x 1-3/8" - C-K
	1962X1	4	SCREW and WASHER, to No. 1 hold down bracket 5/16" x 1" - C-K
	1783x1	2	SPEED NUT 5/16" - C-K (on bracket)
	1578x45	2	SPEED NUT 5/16" - C-K (on reinforcement)
	1906x25	6	SCREW and WASHER, to front hinge pillar 5/16" - 18 x 1-3/8"
	41x184	6	WASHER, plain 5/16" (Calif.)

1604 - REAR FENDERS (Plates 16-4, 15 and 23-7)

1604-1	1314676p	1	FENDER, right rear - K (prime)
	1316190p	1	FENDER, left rear - K (prime)
	250738	*	SEALER, rear fender - 84 ft. roll

Thick

ILLUST. NUMBER	PART NUMBER	PER CAR	DESCRIPTION	
1604-7	299850	*	SHIM, rear fender to rear pillar - C-K	1/16"
1604-7	299851	*	SHIM, rear fender to rear pillar - C-K	1/8"
	311446x1	*	SHIM, rear fender to body No. 4 brkt. - C-K	1/16"
	311446x2	*	SHIM, rear fender to body No. 4 brkt. - C-K	1/8"
	311446x3	*	SHIM, rear fender to body No. 4 brkt. - C-K	3/16"
1604-10	308234	1	DEFLECTOR, left rear fender gravel - C-K	
	2052x3	1	BOLT and WASHER, to fender 5/16" - 18 x 3/4"	
	g120376	1	NUT, hex. 5/16" - 18	
	g446363	2	WASHER, plain 5/16"	
	1570x3	1	BOLT and WASHER, to fender 5/16" x 3/4" - C-K	
	1743x1	*	SPEED NUT 5/16"	
	g446363	*	WASHER, plain 5/16"	
	g271184	3	NUT, to wheelhouse 5/16" - 18 - C-K	
	g446470	*	WASHER, plain 3/8"	
1604-11	303629	1	SEAL, upper, left fender to deflector - C-K	
	308237	1	SEAL, lower, left fender to deflector - C-K	
1604-13	308218p	1	PANEL, right rear fender to bumper filler - C-K	
	308219p	1	PANEL, left rear fender to bumper filler - C-K	
	g173394	2	SCREW, to fender 1/4" - 14 x 5/8"	
	g120386	2	WASHER, plain 5/16"	
1604-20	303078p	1	DOOR, left rear fender gas filler - C-K	
	g144811	2	BOLT, to hinge No. 10 - 12 x 1/2"	
	1578x39	2	SPEED NUT, No. 10	
	261419	2	BUMPER, left rear fender gas filler door - rubber	
1604-21	285124	1	HINGE, rear fender gas filler door - C-K	
	g271163	2	NUT, to fender or panel No. 8 - 32	
1604-23	285120	1	SPRING, front, gas filler door - C-K-D	
1604-24	285121	1	SPRING, rear, gas filler door - C-K-D	
1604-37	303648p	1	BRACE, rear, right fender to body - C-K	
1604-38	303646p	2	BRACE, front, fender to body - C-K	
	1570x3	6	BOLT, fastening 5/16" - 10 x 3/4" - C-K	
	1743x19	*	SPEED NUT 5/16"	
1604-39	1312572p	1	FIN, right rear fender	
	1312573p	1	FIN, left rear fender	
			Fender Side Mouldings	
1604-40	1312516	1	MOULDING, right rear fender side - K	
1604-40	1312517	1	MOULDING, left rear fender side - K	
	1314710	2	CLIP and SEAL, to fender	
	2049x6	2	SCREW, to fender No. 6 - 18 x 3/8"	
1604-41	1312576wp	1	MOULDING, right rear fender "V" - K Used on model 56J before body number 469	
1604-41	1312577wp	1	MOULDING, left rear fender "V" - K Used on model 56J before body number 469	
1604-41	1312692wp	1	MOULDING, right rear fender "V" - K Used on and after body number 469	
1604-41	1312693wp	1	MOULDING, left rear fender "V" - K Used on and after body number 469	
	286415	6	CLIP, to fender	
	1533x7	2	SCREW, to fin No. 8 - 15 x 3/4"	
	1578x19	2	SPEED NUT, No. 8 Used on model 56J before body number 321	
	1312586	1	BRACKET, right rear fender "V" mldg. Used on and after body number 321	
	1312587	1	BRACKET, left rear fender "V" mldg. Used on and after body number 321	
			Fender Top Mouldings	
1604-43-1	1312538	1	MOULDING, right rear fender curb - K	
1604-43-1	1312539	1	MOULDING, left rear fender curb - K	

ILLUST. NUMBER	PART NUMBER	PER CAR	DESCRIPTION
	1526x47	8	SCREW, to fender No. 6 - 18 x 3/8"
1604-43-2	1314798	1	MOULDING, right rear fender wheel opening - K7-K9
	1314799	1	MOULDING, left rear fender wheel opening - K7-K9
	1314795	10	CLIP and STUD to fender
	g271166	10	NUT and WASHER, hex. No. 10 - 24
			Fender Joint Covers, Bead and Fin Mouldings
1604-50	306026p	1	MOULDING, right rear fender to body bead - C-K
	306027P	1	MOULDING, left rear fender to body bead - C-K
1604-55	1312932p	1	MOULDING, outer right, rear fender fin Used on model 56J before body number 469
	1312933p	1	MOULDING, outer left, rear fender fin Used on model 56J before body number 469
1604-55	1312884	1	MOULDING, outer right, rear fender fin Used on and after body number 469
	1312885	1	MOULDING, outer left, rear fender fin Used on and after body number 469
	1312928p	1	MOULDING, inner right, rear fender fin
	1312929p	1	MOULDING, inner left, rear fender fin
	1093x54	24	TEE BOLT, inner mldg. No. 6 - 32 x 5/8"
	1093x54	18	TEE BOLT, outer mldg. No. 6 - 32 x 5/8" Used on model 56J before body number 469
	1921x2	*	CLIP, tubular
	g273286	14	NUT, rear, tee bolt No. 6 - 32
	1908x5	14	WASHER, rear, sealer
	1312886	16	CLIP and STUD, outer mldg. to fender Used on and after body number 469
	g271166	16	NUT and WASHER, hex. No. 10 - 24
1605 - REAR FENDER BOLTS, NUTS and WASHERS (Plate 16-1, *Not 56J Plate*)			
	2052x4	6	SCREW and WASHER, fender to body pillar 5/16" - 18 x 1-1/4" - C-K
	g446470	*	WASHER, plain 3/8"
	1840x1	4	BOLT, fender to wheelhouse 5/16" - 10 x 1-1/8" - C-K
	1743x1	4	SPEED NUT 5/16"
	g446470	4	WASHER, plain 3/8"
	1840x1	2	BOLT, front, to wheelhouse and side panel 5/16" - 10 x 1-1/8" - C-K
	1570x3	14	BOLT, center and rear, to wheelhouse and side panel 5/16" - 10 x 3/4" - C-K
	1743x15	16	SPEED NUT 5/16"
	g446363	18	WASHER, plain 5/16"
	g173394	6	BOLT, to deck side panel 1/4" - 14 x 5/8" - C-K
	1743x9	6	SPEED NUT, No. 14
	g120386	6	WASHER, plain 5/16"
	2052x4	2	SCREW and WASHER, to No. 4 body bracket 5/16" - 18 x 1-1/4" - C-K
	g446363	2	WASHER, plain 3/8"
1610 - REAR BUMPER GRAVEL DEFLECTOR (Plate 16-4)			
1610-1	536828p	1	DEFLECTOR, rear bumper gravel - C-K (dual exhaust)
	g173741	3	SCREW, to frame 5/16" - 18 x 1/2"
1610-3	1312825	1	DEFLECTOR, rear bumper gravel - C-K
	g161895	8	SCREW, to body No. 10 x 1/2" - C-K
	287427	*	BUMPER, deflector to bumper bar - rubber - C-K

ILLUST. NUMBER	PART NUMBER	PER CAR	DESCRIPTION
1620 - HOOD ASSEMBLY (Plate 16-4)			
1620-1	1312010p	1	TOP, hood - stripped - C-K
1620-2	2033x2	1	INSULATOR, hood top
	1312090	1	REINFORCEMENT, hood top front - C-K
1620-5	303068p	1	HINGE w/LINKS, right, hood top - C-K
	303069p	1	HINGE w/LINKS, left, hood top - C-K
	g180077	6	BOLT, to body 5/16" - 18 x 3/4"
	g120376	6	NUT, hex. 5/16" - 18
	g120393	12	WASHER, plain 5/16"
	g120214	6	WASHER, lock 5/16"
	g125127	4	NUT, slotted, to hood 3/8" - 16
	g120394	4	WASHER, plain 3/8"
	- - - -	4	COTTER, 1/16" x 3/4"
1620-14	284505p	2	SPRING, hood top hinge
1620-25	1312192	1	MOULDING, hood top lower - C-K
	1312194	2	CLIP and STUD, to hood - 1-3/4" long
	1312195	2	CLIP and STUD, to hood - 3/4" long
	g271172	4	NUT and WASHER, hex. 1/4" - 20
	g446179	4	WASHER, plain 1/4"
1620-34	1312038	2	BUMPER, front, hood - rubber - C-K (on fender exten.)
	274974	*	BUMPER, side, hood - rubber 5/32" - on fender
	283157	*	BUMPER, side, hood - rubber 7/32" - on fender
	1314376	1	RETAINER, right, hood front bumper - C-K
	1312826	1	RETAINER, left, hood front bumper - C-K
1620-38	1312185	1	ORNAMENT, hood top - C-K
	1959x4	2	STUD, to hood 1/4" - 20 x 1" - C-K
	g440491	2	NUT, 1/4" - 20
1620-50	1314089p	1	PROP, hood top - C-K
1620-53	299777	1	CLIP, retainer
1620-55	1314747	1	CLIP, hood top prop holder - C-K
	- - - -	1	RIVET, to bracket or baffle 3/16" x 7/32"
1620-60	304759p	1	ROD, hood hinge tie - C-K
	g120910	4	BOLT, to link No. 10 - 24 x 3/4"
	g271166	4	NUT and WASHER, hex. No. 10 - 24
1620-61	292268	2	ANTI-RATTLER, hood hinge tie rod - C-K
1620-62	308907p	2	SPRING, hood hinge tie rod tension
1622 - HOOD LOCKS (Plate 16-4)			
1622-65	1314155	1	PLATE ASSY., hood lock - C-K
	1905x16	4	SCREW, fastening 5/16" - 18 x 3/4"
	1578x23	4	SPEED NUT 5/16" - C-K
1622-67	1314156	1	LEVER, hood lock latch - C-K
	299094	1	RIVET, to plate - special
1622-71	299078	1	SPRING, hood lock latch lever pull back
1622-73	308742	1	DOVETAIL, hood lock
1622-74	287169	1	NUT, to hood 1/2" - 20
1622-75	1314833p	1	SPRING, hood top lift
1622-76	286105	1	RETAINER, upper
1622-77	308747	1	RETAINER, lower
1622-79	308144	1	HOOK, hood lock safety
1622-83	308139	1	SPRING, tension
	g135337	1	RIVET, to plate 1/4" x 2-3/8"
1622-84	1314115	1	CATCH, hood lock safety hook - C-K (fastened with dovetail nut)
1622-85	1312348	1	BRACKET, right, hood lock plate support - C-K
1622-86	1312349	1	BRACKET, left, hood lock plate support - C-K
	1501x30	2	SCREW and WASHER, to lower panel 5/16" - 18 x 5/8"
1622-90	1314152p	1	LEVER and BRACKET, hood lock operating - C-K
	g271172	1	NUT, to apron weld bolt 1/4" - 20

ILLUST. NUMBER	PART NUMBER	PER CAR	DESCRIPTION
1622-92	1312669	1	ROD, hood lock operating - C-K
	1902x3	1	CLIP, retaining

* - Use as required ▲ - Not available

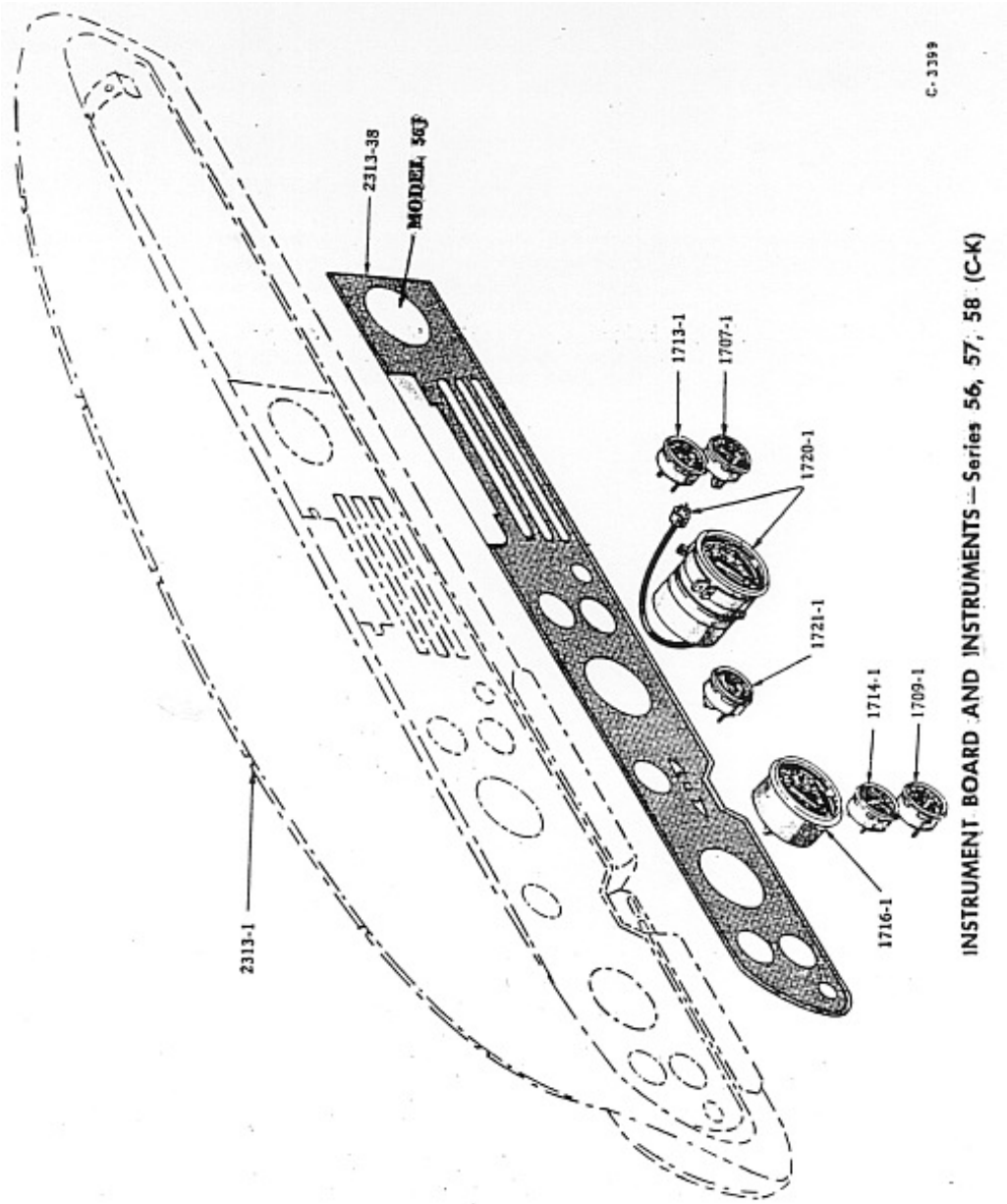

INSTRUMENT BOARD AND INSTRUMENTS — Series 56, 57, 58 (C-K)

ILLUST. NUMBER	PART NUMBER	PER CAR	DESCRIPTION
1701 - INSTRUMENT PANEL			
1701-19	537874	3	SHIELD, directional lights 21/32" long - C-K
1701-20	1312923	1	BRACKET, directional lights shield - C-K
	1539916	1	COVER, directional lights shield - C-K
	g161629	2	SCREW, to bracket No. 8 - 15 x 1/2"
1701-26	1540269	1	CABLE, directional lights shield cover ground - C-K
1701-39	536858	1	DISC, bright light signal light - red
	536859	2	DISC, directional lights signal light - green
	g127934	5	BULB, inst. panel lamp - #57
	g131282	1	BULB, bright light signal lamp - #53
1707 - OIL PRESSURE GAGE (Plate 17-4)			
1707-1	1539878	1	GAGE, oil pressure - C-K
	g120614	2	NUT, terminal No. 10 - 32
1707-5	537589	1	ADAPTER, gage to pipe restricted - C-K
1707-7	1540118	1	BRACKET or CASE, oil pressure and gas gage - C-K
	g120614	2	NUT, to gage No. 10 - 32
	g138479	2	WASHER, shakeproof No. 10
1709 - AMMETER (Plate 17-4)			
1709-1	1539877	1	AMMETER - C-K
	g120614	2	NUT, terminal No. 10 - 32
	g138479	2	WASHER, shakeproof No. 10
1709-7	1540118	1	BRACKET or CASE, ammeter and radimeter mtg. - C-K
	g120614	2	NUT, to gage No. 10 - 32
	g138479	2	WASHER, shakeproof No. 10
1713 - GASOLINE GAGE (Plate 17-4)			
1713-1	1539880	1	GAGE, gasoline - C-K
	g120614	2	NUT, terminal No. 10 - 32
	g138479	2	WASHER, shakeproof No. 10
1707-7	- - - -	1	BRACKET, gas gage mtg. - C-K - see Group 1707
	g120614	2	NUT, to gage No. 10 - 32
	g138479	2	WASHER, shakeproof No. 10
1714 - RADIMETER OR WATER TEMPERATURE INDICATOR (Plate 17-4)			
1714-1	1539879	1	RADIMETER, - dash unit - C-K
	g120614	2	NUT, terminal No. 10 - 32
	g138479	2	WASHER, shakeproof No. 10
1709-7	- - - -	1	BRACKET, radimeter mtg. - C-K - see Group 1709
	g120614	2	NUT, to gage No. 10 - 32
	g138479	2	WASHER, shakeproof No. 10

ILLUST. NUMBER	PART NUMBER	PER CAR	DESCRIPTION

1716 - SPEEDOMETER AND DRIVE PARTS (Plate 17-4)

1716-1	1539884	1	SPEEDOMETER (head) miles - K7-K9
	1539885	1	SPEEDOMETER (head) metric - K7-K9
1716-1-2	1540117	1	BRACKET, speedometer mtg. - C-K
	g120614	2	NUT, to gage No. 10 - 32
	g138479	2	WASHER, shakeproof No. 10

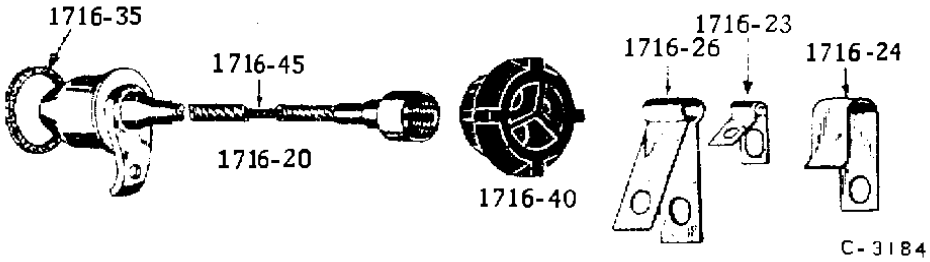

SPEEDOMETER CORE AND SHAFT

1716-20	526369	1	SHAFT w/CORE, speedo. - w/OD. 62" long
1716-20	6421081	1	SHAFT w/CORE, speedo. - w/AD.
	1296x252	1	SCREW, to transmission 1/4" - 20 x 5/8"
	g120380	1	WASHER, lock 1/4"
1716-23	529401	1	CLIP, to floor pan - LHC w/OD. and AD.
	g133043	1	BOLT, to pan 1/4" - 20 x 3/4" w/OD. and AD.
	- - - -	1	NUT, hex. 1/4" w/OD. and AD.
	g120380	1	WASHER, lock 1/4" w/OD. and AD.
1716-30	- - - -	1	GEAR, speedo. drive (see speedo, gear and pinion chart)
1716-31	- - - -	1	PINION, speedo. drive (see speedo, gear and pinion chart)
1716-35	515701	1	GASKET, speedo. shaft to transmission
1716-40	532857	1	GROMMET, speedo. shaft dash
1716-45	526370	1	CORE, speedometer shaft - w/OD.
	- - - -	1	CORE, speedometer shaft - w/AD. (use 6421081)
1716-50	6450518	1	ADAPTER, speedo. drive pinion - w/AD. (illustrated plate 08-9)
1716-51	6450274	1	RING, retaining (illust. plate 08-9)
1716-52	g442904	1	PIN, locating (illust. plate 08-9)

SPEEDOMETER GEAR AND PINION CHART

1716-30A

1716-30B

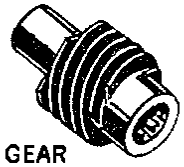

1716-30C

C-2853

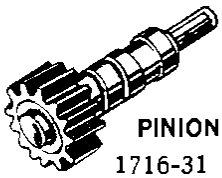

1716-31

ILLUST. NUMBER	PART NUMBER	PER CAR	DESCRIPTION

SPEEDOMETER GEAR AND PINION CHART
OD. - For cars with overdrive transmission
AD. - For cars with automatic transmission

AXLE RATIO	TYPE	GEAR	TEETH	PINION	TEETH	TRANS.
3.07	C	6450308	6	6450318	18	AD. T85
3.54	B	1539339	6	537704	16	OD. T85
3.73	B	1539339	6	537704	16	OD. T85
*3.92	B	1539339	6	536503	17	OD. T85
4.09	B	529063	6	529060	18	OD. T86
4.09	B	1539339	6	529060	18	OD. T85
4.27	B	1539339	6	534806	19	OD. T85
4.55	B	1539339	6	529061	20	OD. T85

* The 3.92 axle ratio was not listed for the 56J.

1718 - CLOCK

	AC-2756	1	CLOCK KIT, electric - C-K
	g134530	1	NUT, terminal No. 6 - 32
	g131044	1	WASHER, lock No. 6
	1540242	2	BRACKET, to clock mounting - C-K
	g120614	2	NUT, to clock No. 10 - 32
	g138479	2	WASHER, shakeproof No. 10
	g149559	1	FUSE, clock cable - 1 amp.
	- - - -	1	COVER, clock hole - see Group 2313C

1720 - TACHOMETER (Plate 17-4)

1720-1	1539881	1	TACHOMETER and CABLE - C-K
	1540121	1	BRACKET, tachometer mounting - C-K
	g132124	1	SCREW, clamping No. 10 - 32 x 3/4"
	g120614	1	NUT, hex. No. 10 - 32
	g138479	1	WASHER, shakeproof No. 10
	1540123	1	CABLE, tachometer to distributor unit drive - C-K
	526600x3	2	CLIP, to chassis cables
1720-5	1540124	1	DRIVE UNIT ASSY., tachometer - C-K (illust. plate 06-5) mtg. under distributor cap incls. clamps and cotters
	1541385	2	CLAMP, to distributor
	- - - -	2	COTTER, 1/16" x 3/4"

1721 - VACUUM GAGE (Plate 17-4)

1721-1	1539882	1	GAGE, vacuum - K7
	1540126	2	BRACKET, vacuum gage mounting - K7-K9
	g120614	2	NUT, to gage No. 10 - 32
	g138479	2	WASHER, shakeproof No. 10
	959x40	1	HOSE, vacuum gage to carburetor - K7-K9
	532855	1	GROMMET, vacuum gage to carb. hose dash - K7
	g444148	1	TEE, gage to carb. hose outlet - carb. end
	1540321	1	NIPPLE, pipe
	g103878	1	PLUG, pipe 1/4" (less power steering)

* - Use as required
▲ - Not available

FRONT SHOCK ABSORBER
REAR SHOCK ABSORBER
From page 515 - Chassis Parts Manual

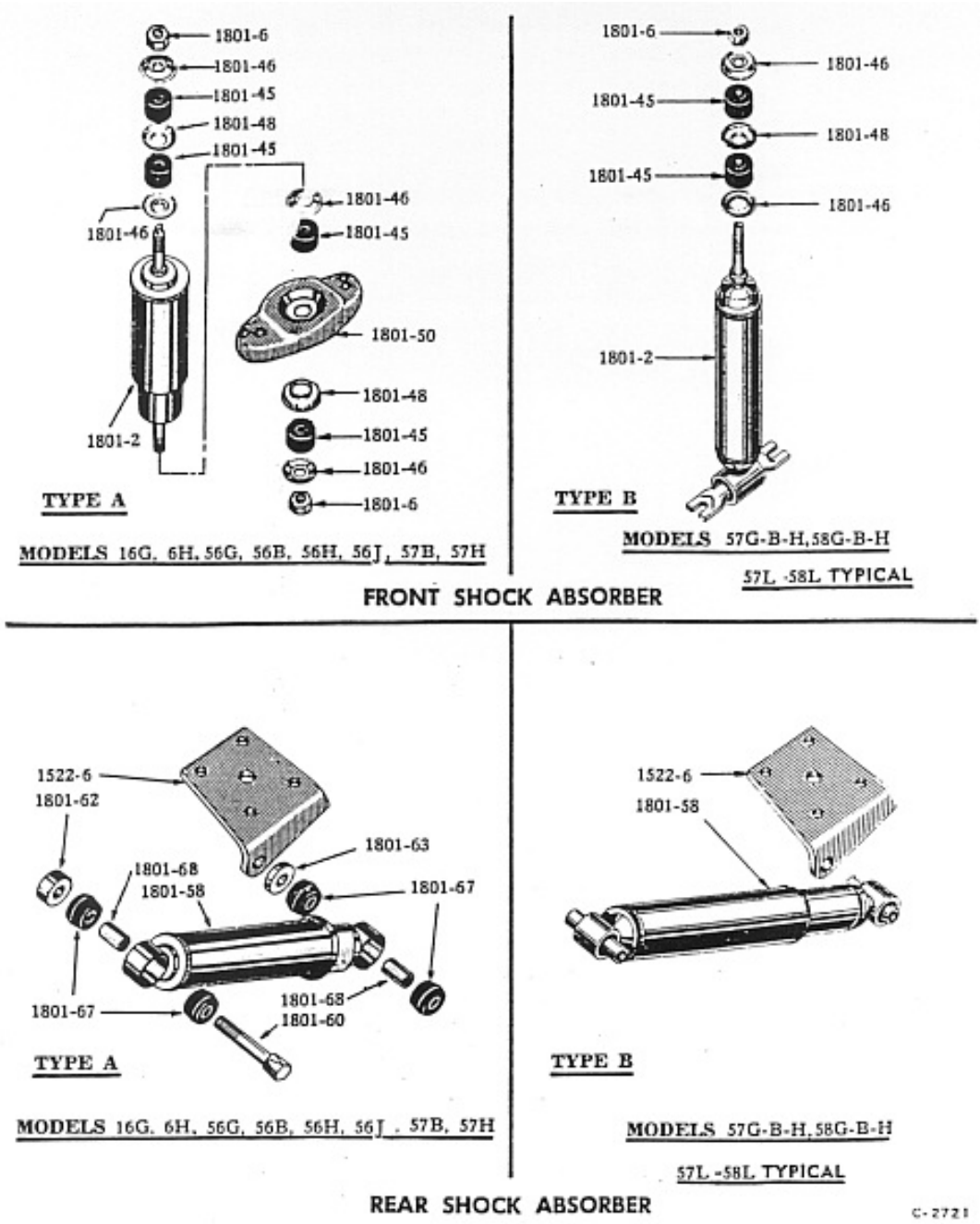

BUMPER BARS and GUARDS
FRONT and REAR
From page 516 - Chassis Parts Manual

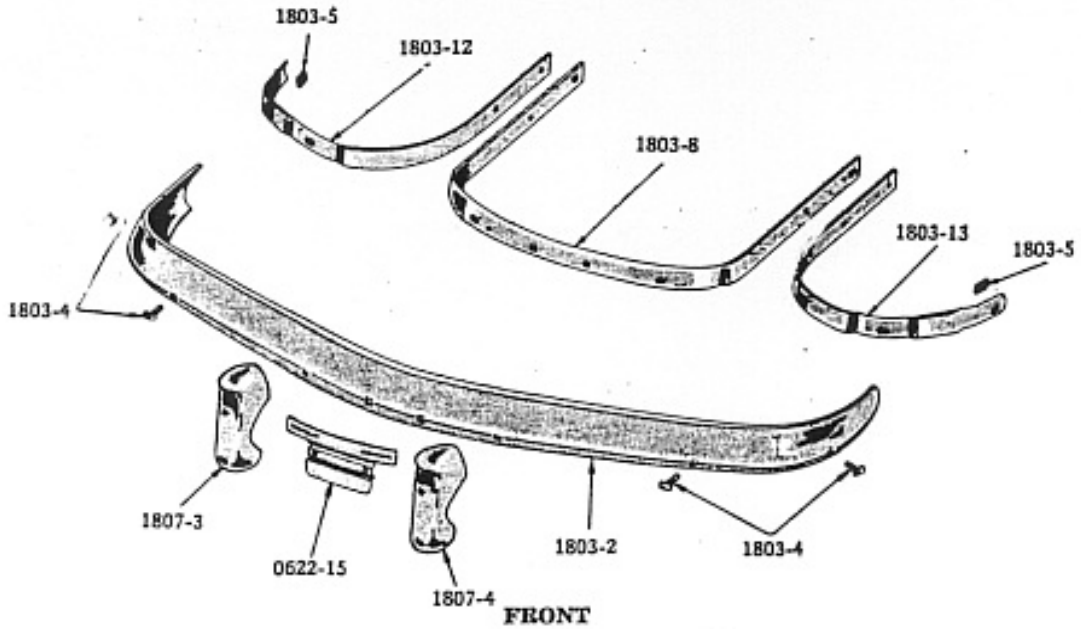

FRONT

MODELS 16G, 6H (W-Y-F-C-K)

MODELS ~~56G-B-H-J~~ '57G-B-H, 58G-B-H(C-K)

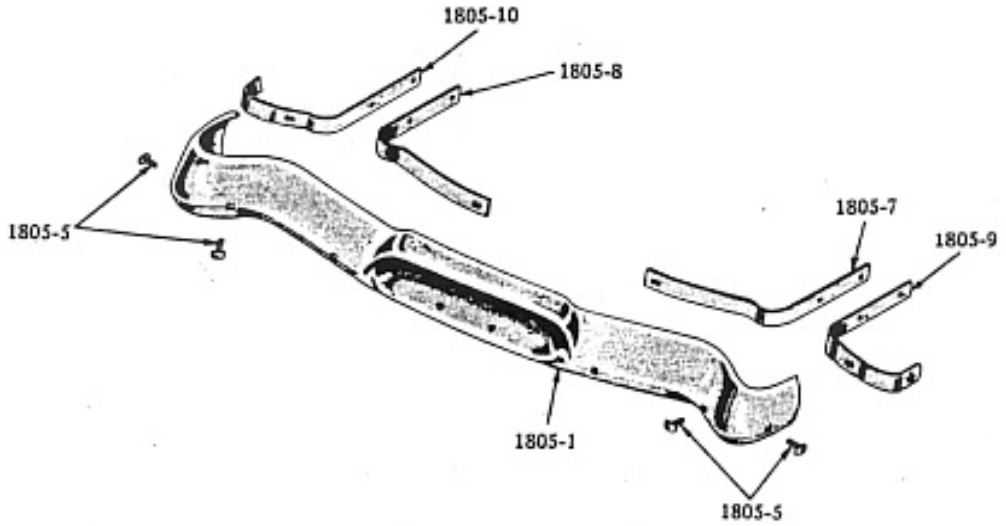

REAR

MODELS 16G, 6H (W-Y-F-C-K)

MODELS ~~56G-B-H-J~~ 57G-B-H 58G-B-H-L (C-K)

C-3215

ILLUST. NUMBER	PART NUMBER	PER CAR	DESCRIPTION	Type
1801 - SHOCK ABSORBERS (Plate 18-1)				
			Front Shock Absorbers	
1801-2	1539527	2	SHOCK ABSORBER - std. (Monroe) U.S.A.	A
1801-2	536398	2	SHOCK ABSORBER - HD. (Gabriel)	A
1801-2	537712	2	SHOCK ABSORBER - HD. (Gabriel) adj. type	A
1801-6	510569	4	NUT, fastening 3/8" - 24 for type A shock absorber	
	g107828	4	PAL NUT, locking 3/8" - 24 for type A shock absorber	
1801-45	522673	8	GROMMET, shock absorber	A
1801-46	510568	8	RETAINER, shock absorber grommet	A
1801-48	522777	4	SEAT, shock absorber grommet	A
1801-50	531895	2	SUPPORT, shock absorber lower	A
	531075	4	BOLT, to control arm 5/16" - 24 x 3/4"	
	g120368	4	NUT, hex. 5/16" - 24	
	g120214	4	WASHER, lock 5/16"	
			Rear Shock Absorbers	
1801-58	1539543	2	SHOCK ABSORBER - std. (Monroe) U.S.A.	A
1801-58	536399	2	SHOCK ABSORBER - HD. (Gabriel)	A
1801-58	537714	2	SHOCK ABSORBER - HD. (Gabriel) adj. type	A
1801-60	524831	2	STUD, to frame 7/16" - 20 x 3-3/8" for type A shock absorber	
	g181411	2	BOLT, to plate 7/16" - 20 x 3" for type A shock absorber	
	g271506	4	NUT, hex. 7/16" - 20 for type A shock absorber	
	41x377	4	WASHER, plain 7/16" for type A shock absorber	
	g120383	4	WASHER, lock 7/16" for type A shock absorber	
1801-62	524832	2	SPACER, stud 1/2" thick for type A shock absorber	
1801-63	527974	2	SPACER, bolt 1/4" thick for type A shock absorber	
1801-67	523117	8	BUSHING, shock absorber - rubber	A
1801-68	524833	4	SPACER, shock absorber bushing	A
1803 - FRONT BUMPERS (Plate 18-2)				
			Face Bars	
1803-2	1539589w	1	BAR, outer face, front bumper	
1803-4	524972	4	BOLT, to supt. bars 7/16" - 14 x 1-1/4"	
1803-5	1541769	*	SPACER, bolt - C-K	
	g272599	*	NUT, hex. 7/16" - 14	
	41x359	*	WASHER, plain 7/16"	
			Front Bumper to Frame Support Bars	
1803-8	1539042p	1	BAR, support, inner - C-K	
1803-12	1539040p	1	BAR, support, outer right - C-K	
1803-13	1539041p	1	BAR, support, outer left - C-K	
	g180123	4	BOLT, outer to inner bar 3/8" - 16 x 1-1/8"	
	g451009	4	NUT, locking 3/8" - 16	
	1296x90	4	BOLT, to frame 7/16" - 20 x 3" - U.S.A.	
	1541479	4	NUT, hex. 7/16" - 20	
	41x359	*	WASHER, lock 7/16"	

ILLUST. NUMBER	PART NUMBER	PER CAR	DESCRIPTION
1805 - REAR BUMPERS (Plate 18-2)			
			Face Bars
1805-1	536005w	1	BAR, outer face, rear bumper - C-K
1805-5	524972	*	BOLT, to supt. bars 7/16" - 14 x 1-1/4"
	g272599	*	NUT, hex. 7/16" - 14
	41x359	*	WASHER, plain 7/16"
1805-7	536100p	1	BAR, support, inner right - C-K
1805-8	536101p	1	BAR, support, inner left - C-K
1805-9	536102p	1	BAR, support, outer right - C-K
1805-10	536103p	1	BAR, support, outer left - C-K
	g181670	4	BOLT, to frame 7/16" - 20 x 1-1/2"
	g271506	4	NUT, hex. 7/16" - 20
	41x359	*	WASHER, plain 7/16"
	g136857	4	WASHER, lock 7/16"
	534241	2	WASHER, rear bolt lock - special
1807 - BUMPER GUARDS AND VERTICAL BUMPERS (Plate 18-2)			
1807-3	1539032w	1	VERTICAL BUMPER, right, front bumper
1807-4	1539033w	1	VERTICAL BUMPER, left, front bumper
	g272599	*	NUT, to bumper 7/16" - 14

BUMPER JACK

ILLUST. NUMBER	PART NUMBER	PER CAR	DESCRIPTION
1812 - TOOLS			
	1689485	1	PUMP, tire (export)
	g127832	1	GUN, grease (export)
	513201	1	WRENCH, jack handle and wheel socket
	1539167	1	JACK, less base (used with base 1539037)
	1539165	1	JACK, less base (used with base 536499)

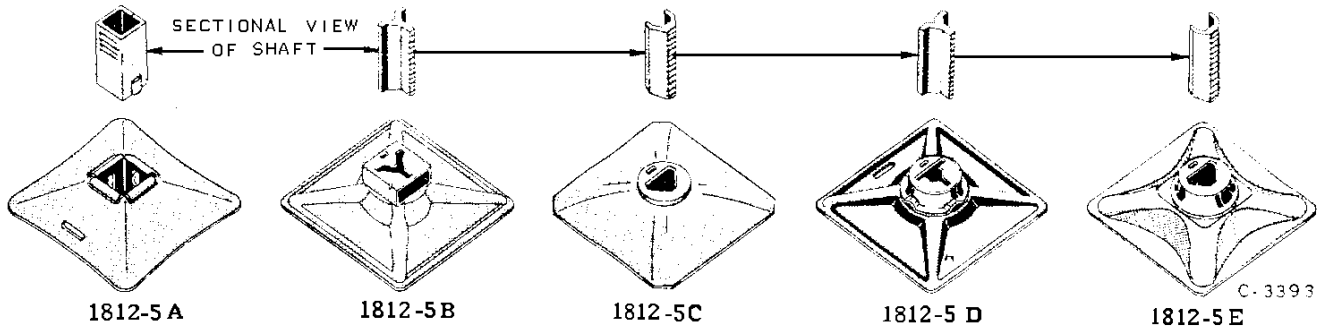

1812-5A	NOT 56J		
1812-5B	NOT 56J		
1812-5C	1539037	1	BASE, jack - U.S.A.
	299057	1	SUPPORT, jack - C-K
	g126460	1	BOLT, carriage 7/16" - 14 x 2"
	g144235	1	WING NUT 7/16" - 14
	g145494	1	SPEED NUT 7/16"
	g120395	1	WASHER, plain 7/16"
1812-5D	NOT 56J		
1812-5E	NOT 56J		

* - Use as required
▲ - Not available

TYPICAL BODY INTERIOR, ACCESSORIES, MOULDINGS, ETC.

From page 261 - Body Parts Manual

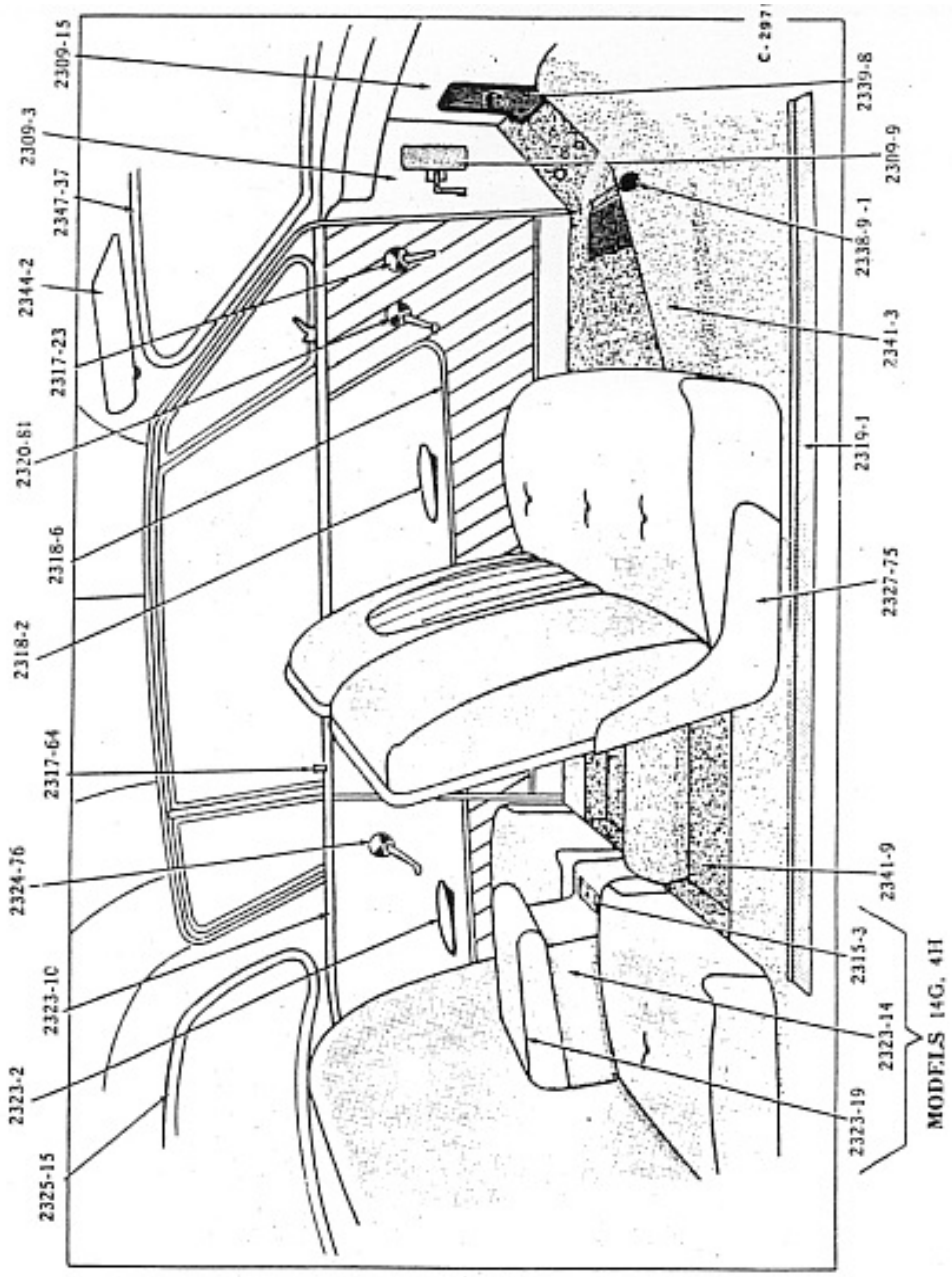

TYPICAL BODY INTERIOR, ACCESSORIES, MOULDINGS, ETC.
Body Symbol K

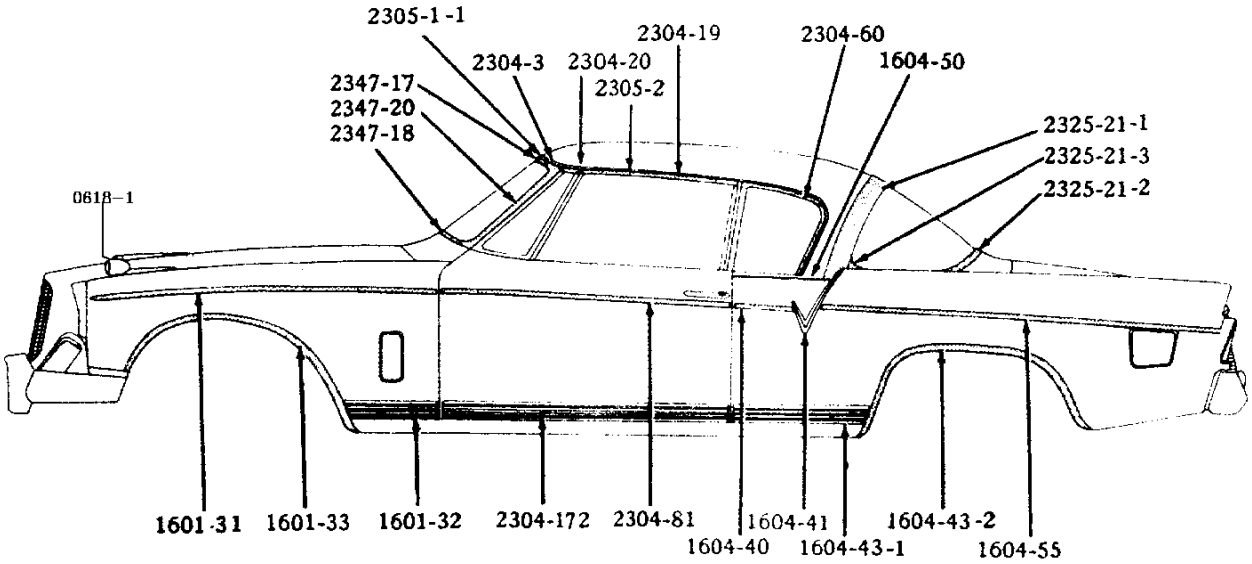

MODEL 56J

2303 - BODY HOLD DOWN BOLTS AND SHIMS

Hold down bolts are numbered from cowl to rear of body.

g193213	2	BOLT, No. 1 body hold down 7/16" - 20 x 5-1/4"
g271506	2	NUT, hex. 7/16" - 20
g120383	2	WASHER, lock 7/16"
g181643	4	BOLT, No. 2-5 outer, body hold down 3/8" - 24 x 1-1/2" - K
299620	6	SCREW, No. 2-4-5 inner, body hold down 3/8" - 24 x 1-3/4"
299620	2	SCREW, No. 2 bolt brkt. outer reinf. to frame 3/8" - 24 x 1-3/4"
299620	2	SCREW, No. 3 body hold down 3/8" - 24 x 1-3/4"
299620	1	SCREW, No. 6 to rear crossmember 3/8" - 24 x 1-3/4"
g193213	2	BOLT, No. 4 outer, body hold down 7/16" - 20 x 5-1/4" - K
g271506	2	NUT, hex. 7/16" - 20
- - - -	4	WASHER, plain 7/16"
g120383	2	WASHER, lock 7/16"
g181643	2	BOLT, No. 4A, body hold down 3/8" - 24 x 1-1/2" - K
g181643	2	BOLT, No. 7 body hold down 3/8" - 24 x 1-1/2" - K
g120369	*	NUT, hex. 3/8" - 24

The following 5 items used with above bolts and screws

1312563p	1	WASHER, No. 6 bold special 7/16" I.D. x 3" O.D. - K
287680	2	WASHER, plain No. 7, 7/16" I.D. x 2" O.D.
- - - -	*	WASHER, plain 13/32"
- - - -	*	WASHER, plain 7/16"
g120382	*	WASHER, lock 3/8"

			Thick		Width		Length	
291214	2	PLATE, body hold No. 1 bolt reinforcement						
311446x2	*	SHIM, body	1/8"	x	1-1/2"	x	2"	- rubber
311446x4	*	SHIM, body	1/4"	x	1-1/2"	x	2"	- rubber
286471	*	SHIM, body No. 2 bolt - K	1/8"	x	2"	x	2"	- rubber
294004	1	SHIM, propeller shaft cross member to body - rubber						

ILLUST. NUMBER	PART NUMBER	PER CAR	DESCRIPTION

2304 - BODY BELT, DOOR AND ROOF MOULDINGS (Plates 23-7, 24)

Roof Moulding Cover

2304-3	304446	1	COVER, right, front drip moulding - K5-K7-K9
	304447	1	COVER, left, front drip moulding - K5-K7-K9
2304-19	303558	1	COVER, right drip moulding - K5-K7-K9
	303559	1	COVER, left drip moulding - K5-K7-K9
2304-20	303557	3	CLIP, drip moulding cover - K5-K7-K9-J

Door Window Opening Mouldings

2304-51	303560	1	MOULDING, right door open, front upper weatherseal
2304-52	303561	1	MOULDING, left door open. front upper weatherseal
	- - - -	8	SCREW, to pillar No. 6 x 3/8"

Rear Quarter Window Opening Mouldings

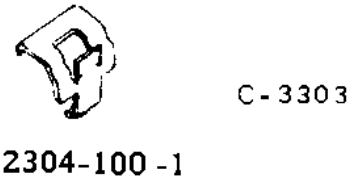

Rear Quarter Window Opening Moulding Clip

2304-60	304152	1	MOULDING, w/CLIPS, right - K5-K7-K9
	304153	1	MOULDING, w/CLIPS, left - K5-K7-K9
2304-100-1	304109	12	CLIP, to body

Door Side Mouldings

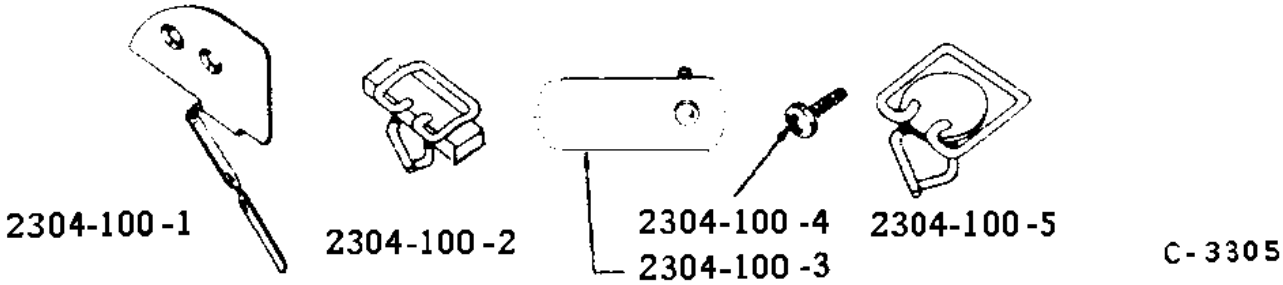

Door Side Moulding Clip

2304-81	1321106	2	MOULDING, door side
2304-100-1	NOT 56J		
2304-100-2	NOT 56J		
2304-100-3	NOT 56J		
2304-100-4	NOT 56J		
2304-100-5	1314710	10	CLIP, door side

ILLUST. NUMBER	PART NUMBER	PER CAR	DESCRIPTION
			Curb Mouldings
2304-172	1312541	2	MOULDING, door curb
	- - - -	10	SCREW, moulding No. 6 - 18 x 1/2"
	- - - -		MOULDING, fender curb (see groups 1601 and 1604)

2305 - ROOF DRIP MOULDINGS (Plate 23-7)

			Roof drip mouldings are welded to roof panel
2305-1-1	302735	1	MOULDING, front, roof drip - K
	302738	1	MOULDING, right, roof drip - K
2305-2	302739	1	MOULDING, left, roof drip - K

2308 - SHROUD PROTECTOR STRIP

	288609	1	SEAL, hood to shroud
	- - - -	2	SCREW, drive No. 6 x 7/16"

ILLUST. NUMBER	PART NUMBER	PER CAR	DESCRIPTION	
2309 - SHROUD KICK PAD AND DASH LINERS (Plate 23-2)				
2309-3	1313354x1	1	KICK PAD, right	Charcoal Black
	1313354x2	1	KICK PAD, right	Dark Blue
	1313354x3	1	KICK PAD, right	Dark Green
	1313354x4	1	KICK PAD, right	Dark Rose Mist
	1313354x5	1	KICK PAD, right	Olive Green Dark
	1313354x6	1	KICK PAD, right	Romany Red
	1313354x7	1	KICK PAD, right	Gold
	1313354x8	1	KICK PAD, right	Tangerine
2309-3	1313299x1	1	KICK PAD, left	Charcoal Black
	1313299x2	1	KICK PAD, left	Dark Blue
	1313299x3	1	KICK PAD, left	Dark Green
	1313299x4	1	KICK PAD, left	Dark Rose Mist
	1313299x5	1	KICK PAD, left	Olive Green Dark
	1313299x6	1	KICK PAD, left	Romany Red
	1313299x7	1	KICK PAD, left	Gold
	1313299x8	1	KICK PAD, left	Tangerine
	1313860p	1	RETAINER, right kick pad - K	
	1313861p	1	RETAINER, left kick pad - K	
	g161860	8	SCREW, to shroud No. 8 x 1/2"	
2309-9	298669p	1	SCREEN, left kick pad	
2309-15	309315x11	1	DASH LINER	Charcoal Black
2309-15	309315x12	1	DASH LINER	Dark Blue
2309-15	309315x13	1	DASH LINER	Dark Green
2309-15	309315x14	1	DASH LINER	Dark Rose Mist
	307029x11	7	FASTENER, to dash	Charcoal Black
	307029x12	7	FASTENER, to dash	Dark Blue
	307029x13	7	FASTENER, to dash	Dark Green
	307029x14	7	FASTENER, to dash	Dark Rose Mist

* - Use as required
▲ - Not available

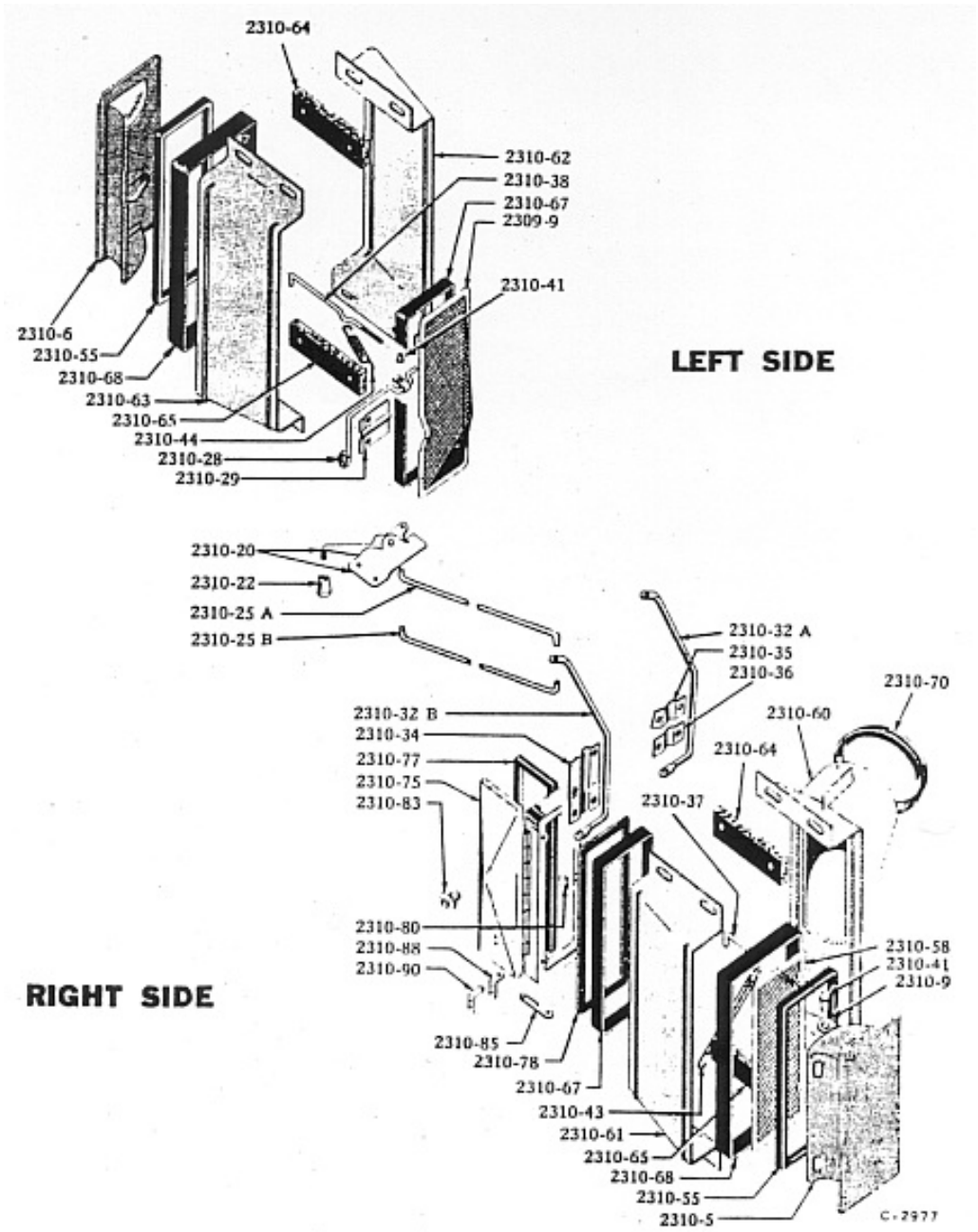

SHROUD VENTILATOR—Body Symbol K

ILLUST. NUMBER	PART NUMBER	PER CAR	DESCRIPTION
2310 - SHROUD VENTILATOR (Plate 23-11)			
2310-5	304450p	1	LID and DEFLECTOR, right vent. (in fender) - K
2310-6	290162p	1	LID and DEFLECTOR, left vent. (in fender) - K
	- - - -	8	NUT, to hinge 5/16" - 18
	g446363	8	WASHER, plain 3/8"
2310-9	- - - -	1	BRACKET, right vent. lid (welded to lid) K - LHC
2310-20	1314319p	1	HANDLE and BRACKET, right vent. control - K
	- - - -	2	BOLT, to instrument board 1/4" - 20 x 1"
	- - - -	2	NUT and WASHER, hex. 1/4" - 20
2310-22	293170x6	1	KNOB, right vent. control handle - K
2310-25A	NOT 56J		
2310-25B	1312519	1	ROD, right vent. control - K
	1903x3	2	CLIP, to handle - K
2310-28	290165x3	1	CONTROL, left vent. - zinc - K - LHC
2310-29	1312082	1	BRACKET, rear, left control - K
	- - - -	2	SCREW, to shroud No. 14 x 1/2"
2310-32A	NOT 56J		
2310-32B	1312518	1	LEVER, right control rod - K
2310-34	304427p	1	BRACKET, right control rod lever - K
	- - - -	4	SCREW, to shroud No. 10 x 5/8"
	g271166	4	NUT, hex. No. 10
	g120391	4	WASHER, plain NO. 10
2310-35	NOT 56J		
2310-36	NOT 56J		
2310-37	299654	1	LINK, right lid - K
2310-38	299786	1	LINK, left lid - K
2310-41	290169	2	PIN, link swivel
2310-43	522293p	1	SPRING, right lid link tension - K
2310-44	287648	1	SPRING, left lid link tension
2310-55	284991	2	WEATHERSEAL, lid - rubber - K
2310-58	285005p	1	SCREEN, right ventilator - K - LHC
	g161869	2	SCREW, to fender No. 8 x 5/8"
(2309-9)	- - - -	1	SCREEN, left ventilator - K - see Group 2309
2310-60	299264p	1	HOUSING, front half, right ventilator - K - LHC
2310-61	303744p	1	HOUSING, rear half, right ventilator - K - LHC
2310-62	303743p	1	HOUSING, front half, left ventilator - K
2310-63	303745p	1	HOUSING, rear half, left ventilator - K
	1906x14	8	BOLT and WASHER, housing to housing No. 14 x 7/8"
	1811x3	8	SPEED NUT No. 14
2310-64	298788	2	GASKET, upper, housing to housing - K - LHC 5-5/8"
2310-65	298789	2	GASKET, lower, housing to housing - K - LHC 4-9/16"
2310-67	286256	2	GASKET, housing to shroud - K - LHC
2310-68	287532	2	GASKET, housing to fender - K - LHC
2310-70	308945p	1	COVER, climatizer opening (not used with climatizer) - K
2310-75	304184p	1	DOOR COMPLETE, right ventilator (includes frame, door, hinge and catch) - K
	g161857	4	SCREW, to shroud No. 8 x 3/8"
2310-77	286444	1	GASKET, right ventilator door - rubber - K - LHC
2310-78	299776	1	GASKET, right vent. door frame - rubber - K - LHC

ILLUST. NUMBER	PART NUMBER	PER CAR	DESCRIPTION
2310-80	291167	1	CATCH, right ventilator door (on frame) - K LHC
	- - - -	2	RIVET, to frame (oval head tubular - steel) 9/64" x 3/16"
2310-83	299653x6	1	KNOB, right ventilator door - K - LHC
	- - - -	1	SCREW, to door No. 10 - 24 x 1/2"
2310-85	290236	1	LINK, right ventilator door - K - LHC
	- - - -	1	RIVET, link to door (oval head tubular - steel) 3/16" x 5/16"
	- - - -	1	WASHER, spring 9/32"
2310-88	290235	1	BRACKET, right ventilator door link - K - LHC
	- - - -	2	RIVET, to door (oval head tubular - steel) 3/16" x 1/4"
2310-90	290237	1	SPRING, right ventilator door link - K - LHC

* - Use as required

▲ - Not available

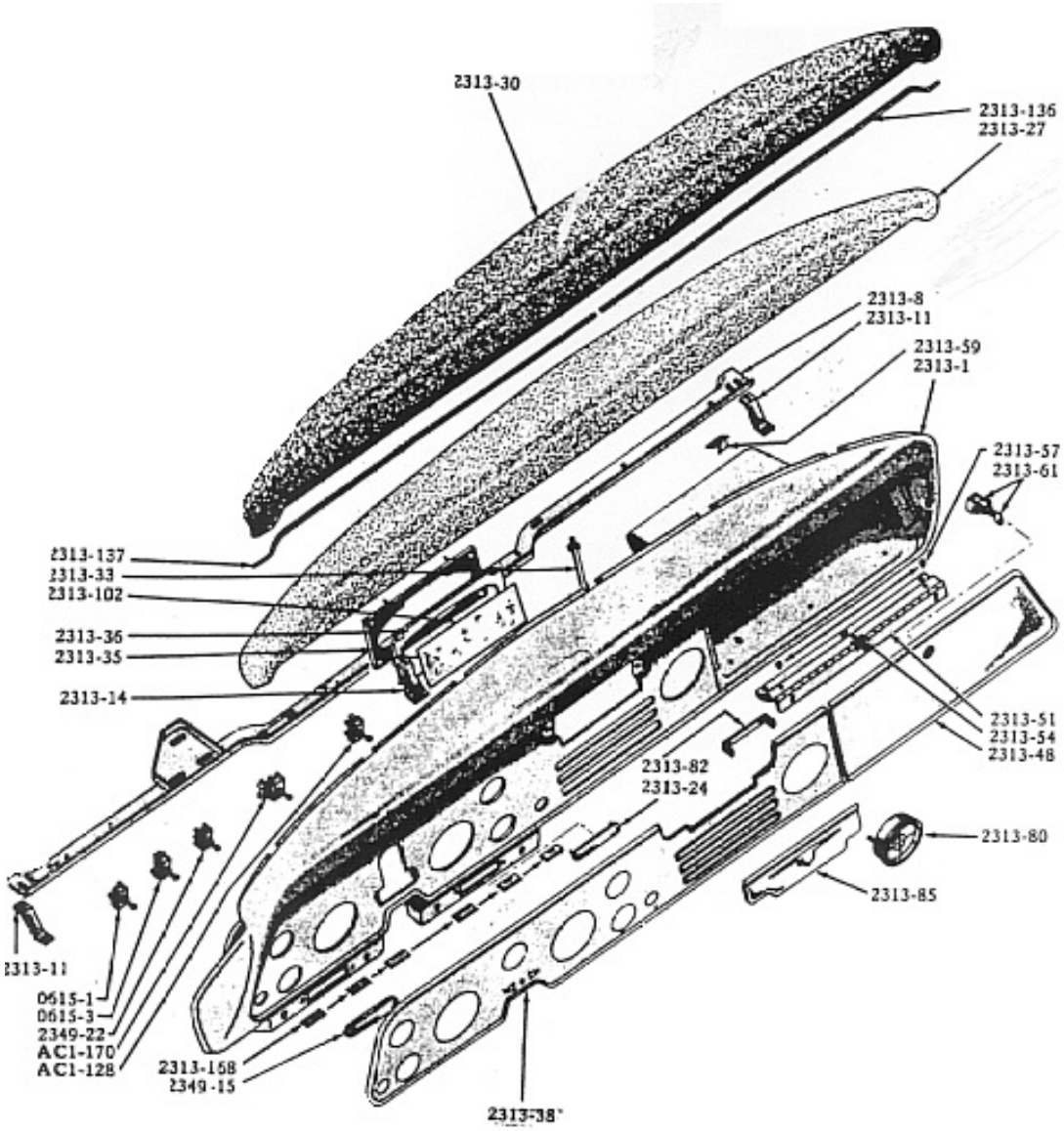

TYPICAL INSTRUMENT BOARD—Models 56, 57, 58
Body Symbol K

ILLUST. NUMBER	PART NUMBER	PER CAR	DESCRIPTION

2313 - INSTRUMENT BOARD (Plate 23-17)

2313A - Instrument Boards

Instrument boards are furnished in prime and are less instruments, ash receiver, compartment door, all mouldings and ornaments.

2313-1	1314832	1	BOARD, inst. - K
	g161860	6	SCREW, to cowl No. 8 - 15 x 1/2"
	- - - -	4	SCREW, to cowl 5/16" - 10 x 7/8"
2313-8	1312919p	1	REINF. and BRACE ASSY., inst. board - K
2313-11	1312921p	2	BRACE, end, reinforcement - K
	- - - -	2	BOLT, board end 1/4" - 20 x 5/8"
	g271172	2	NUT, HEX. 1/4" - 20
2313-14	1312924p	1	BRACE, center, reinforcement - K
	- - - -	1	BOLT, board end 1/4" - 20 x 5/8"
	g180022	1	BOLT, reinf. end 1/4" 20 x 1"
	g271172	2	NUT, hex. 1/4" - 20
	- - - -	2	ANTI-SQUEAK, board to lower bracket
	- - - -	2	PLUG, hole (climatizer and defroster switch)
	- - - -	1	PLUG, hole (cigar lighter)
2313-24	1314478x4	1	COVER, climatizer control hole (not used with heater)
	3037x1	2	SPEED NUT, to board (not used with heater)
2313-27	1313862	1	PAD, safety - rubber - K3-K7
2313-30	1315216x1	1	COVER, safety pad - K Charcoal Black
2313-33	306347p	1	BRACE, inst. board to dash - K
	- - - -	1	BOLT and WASHER, to inst. board 1/4" - 20 x 1"
	- - - -	1	NUT and WASHER, to inst. board 1/4" - 20
	- - - -	1	WASHER, plain 1/4"
	- - - -	1	NUT and WASHER, to dash 5/16" - 18
2313-35	NOT 56J		
2313-36	NOT 56J		
2313-38	1312880	1	FACE, inst. board - K7 Engine turn
	- - - -	2	SCREW, to board No. 8 - 15 x 1/2"

2313B - Compartment Door, Lock, Box and Light

2313-48	1312340p	1	DOOR, compartment (incl. face) K - LHC (less hinge)
	- - - -	*	SCREW, hinge to door No. 10 - 24 x 3/8"
2313-51	1312947	1	HINGE, compartment door - K
	g271166	3	NUT, hex. to board No. 10 - 24
	- - - -	3	WASHER, plain, to board 1/4"
2313-54	1312946	1	SPRING, door hinge - K
2313-56	1312875	2	BUMPER, door - rubber - K
2313-57	309343	2	BUMPER, door hinge - rubber - K
2313-59	308395	1	KEEPER, door lock
	g161857	2	SCREW, to board No. 8 x 3/8"

ILLUST. NUMBER	PART NUMBER	PER CAR	DESCRIPTION
			The following lock kit consists of: 1 - Lock, comp. door, 1 - Cylinder, trunk lock and 2 - Keys
	310105	1	KIT, compartment door and trunk lid lock

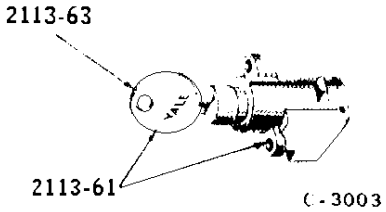

MODELS 56, 57, 58-K-J

COMPARTMENT DOOR LOCK

			The following lock is not coded to specified key numbers.
2313-61	310106	1	LOCK & HOUSING w/LATCH & KEYS, door (Yale)
	- - - -	2	SCREW, to door No. 6 - 32 x 3/8"
	- - - -	2	SPEED NUT, lock screw
2313-63	294090	1	KEY, door lock (Hurd) - specify letter and number
	- - - -	1	LIGHT, compartment - see Group AC13
			2313C - Courtesy Light, Clock Hole Cover, Radio Hole Cover, Radio Grill and Instrument Bezels
2313-80	1540119	1	COVER, clock hole - K3-K7
2313-82	1540132	1	BRACKET, mounting
	g120614	2	NUT, hex. No. 10 - 32
	g138479	2	WASHER, lock No. 10
2313-85	1314476	1	COVER, radio control opening - K
	g271166	2	NUT and WASHER, No. 10 - 24
2313-102	1314646	1	SCREEN, radio grille
			2313D - Mouldings and Name Plates
2313-136	1312856	1	MOULDING, right inst. board - K
2313-137	1312857	1	MOULDING, left inst. board - K
	310207	6	BOLT, moulding "T" No. 6 - 32
	1312854	8	CLIP, moulding
	g271482	6	NUT and WASHER, "T" bolt No. 6 - 32
2313-158	- - - -	1	SPEED NUT, to door
2313-168	1314461	1	NAME PLATE, control knob "Lights" - K
2313-168	1314462	1	NAME PLATE, control knob "Inst. Lts." - K
2313-168	1314463	1	NAME PLATE, control knob "Wiper" - K
2313-168	1314464	1	NAME PLATE, control knob "Defroster" - K - LHC
2313-168	1314465	1	NAME PLATE, control knob "Heat" - K
2313-168	1314466	1	NAME PLATE, control knob "Air" - K - LHC

Speedometer and Instruments - See Division 17

ILLUST. NUMBER	PART NUMBER	PER CAR	DESCRIPTION

2315 - TONNEAU AND DOOR ASH RECEIVER

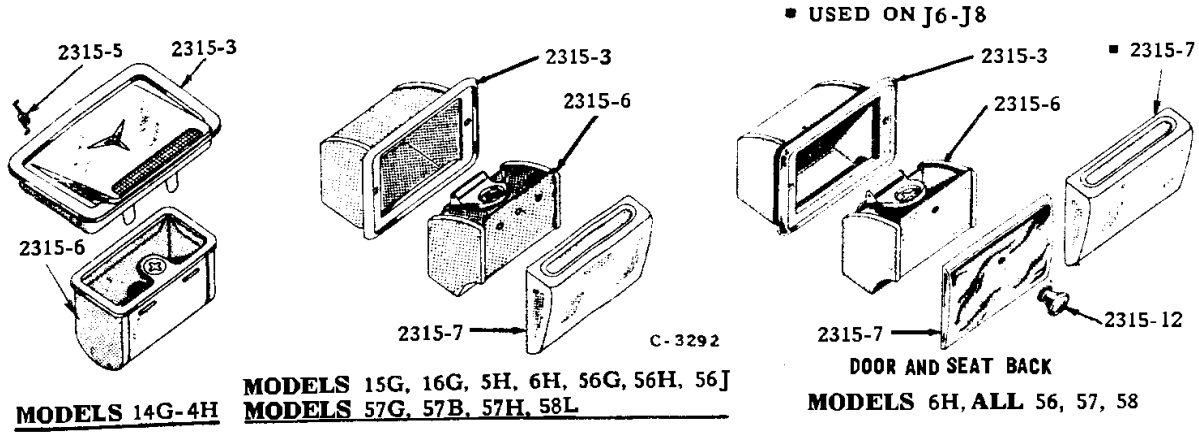

Tonneau ash receivers are located in the rear seat center arm rest

Tonneau Ash Receiver

2315-3	307006	1	RETAINER, ash receiver
	- - - -	2	SCREW, to arm rest base No. 4 x 3/8"
2315-5	NOT 56J		
2315-6	307013	1	TRAY, ash receiver
2315-7	307002w	1	PANEL, ash receiver front
	- - - -	2	SCREW, tray to panel No. 6 x 1/4"

Door Ash Receiver

2315-3	307006	2	RETAINER, ash receiver - K7
	- - - -	4	SCREW, to door No. 6 x 1/2"
2315-6	311273	2	TRAY, ash receiver - K7
2315-7	311221w	2	PANEL, ash receiver front - K7
2315-12	311222w	2	KNOB, ash receiver - K7
	- - - -	2	SCREW, to tray No. 6 - 32 x 5/16"

* - Use as required
▲ - Not available

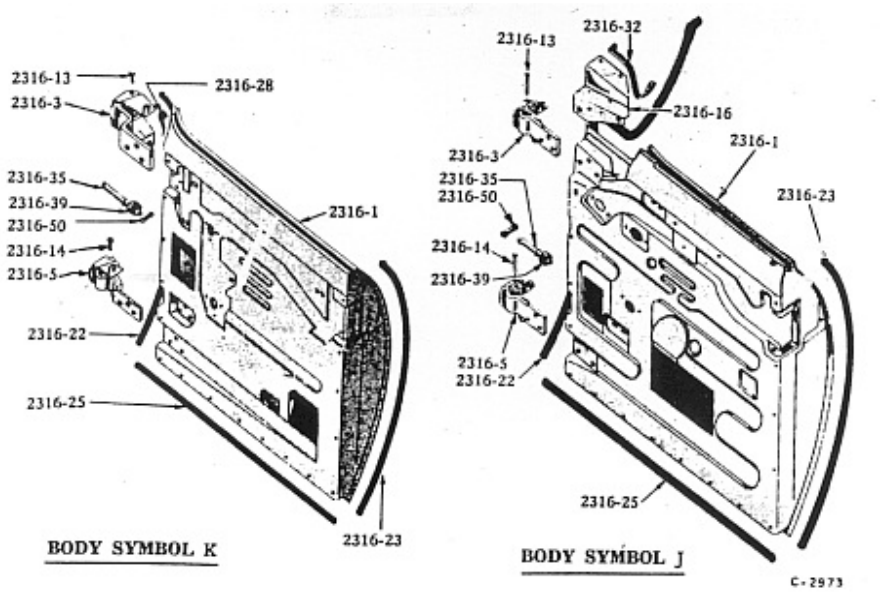

DOOR, HINGES, WEATHERSTRIPS and CHECKS

ILLUST. NUMBER	PART NUMBER	PER CAR	DESCRIPTION
2316 - DOOR, HINGES, WEATHERSTRIPS AND CHECKS (Plate 23-20)			
			2316A - Doors
			The following doors are less paint, trim, glass, hardware, etc.
2316-1	1314668	1	DOOR, right
	1314669	1	DOOR, left
			2316B - Door Hinges
2316-3	303200	1	HINGE, upper, right door - K
	303201	1	HINGE, upper, left door - K
2316-5	303210	1	HINGE, lower, right door - K
	303211	1	HINGE, lower, left door - K
	271651	*	SHIM, to door 1/32"
	307255	*	SHIM, to door 1/16"
	288606	*	SHIM, to door 3/32"
	2046x2	12	SCREW and WASHER, to door 5/16" - 24 x 1-1/4"
	- - - -	8	SCREW and WASHER, to body 5/16" - 24 x 1"
	- - - -	4	SCREW and WASHER, to body 5/16" - 24 x 3/4"
2316-13	284506	2	PIN, upper hinge 11/32" x 2-11/32" - K
2316-14	271149	2	PIN, lower hinge 5/16" x 1-27/32" - K

ILLUST. NUMBER	PART NUMBER	PER CAR	DESCRIPTION
			2316C - Door Weatherstrips
2316-22	303928	1	WEATHERSTRIP, front, right door opening - K
	303929	1	WEATHERSTRIP, front, left door opening - K
2316-23	303930	1	WEATHERSTRIP, rear, right door opening - K
	303931	1	WEATHERSTRIP, rear, left door opening - K
2316-25	298583x5	2	WEATHERSTRIP, lower, door opening - K
	- - - -	2	SCREW, rear, weatherstrip No. 6 x 3/8"
2316-28	306188	1	WEATHERSTRIP, upper, front, right door - K
	306189	1	WEATHERSTRIP, upper, front, left door - K
			2316D - Door Checks
2316-35	297642	2	CHECK COMPLETE, door - K
	285640	2	PIN, to bracket 1/4" x 7/16"
2316-39	292304	2	BUMPER, door check - rubber
2316-50	292307	2	GUIDE, door check arm
	- - - -	4	RIVET, to door 3/16" x 3/8"

* - Use as required
▲ - Not available

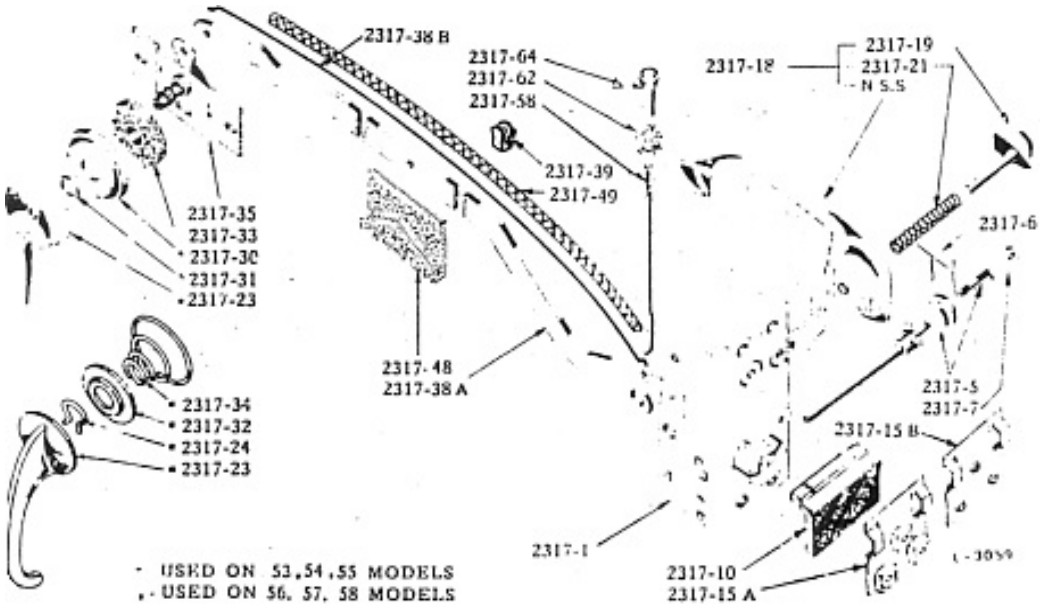

RIGHT DOOR LOCKING MECHANISM

ILLUST. NUMBER	PART NUMBER	PER CAR	DESCRIPTION
2317 - DOOR LOCKS, STRIKERS, HANDLES AND REMOTE CONTROLS (Plate 23-21)			
			2317A - Door Locks and Strikers
2317-1	1312260	1	LOCK, right door
	1312261	1	LOCK, left door
	g157277	8	SCREW, to door No. 12 - 24 x 1/2"
			The following kit consists of 2 - door outside locks, 1 - ignition lock cylinder and 2 - keys.
	532453	1	KIT, door lock and ignition lock cylinder (Hurd)
2317-5	299847	2	LOCK w/KEYS, door outside (Hurd) - K (not coded to specified key number)
2317-6	271441	2	RETAINER, to door (for Hurd lock)
2317-7	525931	2	KEY, door outside lock (Hurd) - specify letter and number
2317-10	1314902	1	STRIKER, right door lock
	1314903	1	STRIKER, left door lock
	1312142	*	SHIM, to pillar 1/8" thick
	1312143	*	SHIM, to pillar 1/16" thick
	g156145	2	SCREW, upper to pillar No. 12 - 24 x 1-1/2"
	g156112	4	SCREW, lower to pillar No. 12 - 24 x 7/8"
2317-15A	1312028	2	PLATE, w/NUTS, fastening (in lock pillar)
2317-15B	NOT 56J		

ILLUST. NUMBER	PART NUMBER	PER CAR	DESCRIPTION
			2317B - Door Handles
2317-18	298974	2	HANDLE, door outside
	2061x2	2	SCREW and WASHER, to door No. 10 - 24 x 3/4"
2317-19	298316w	2	BUTTON and GUIDE, door outside handle
2317-21	298319	2	SPRING, tension
2317-23	1312640x1	2	HANDLE, door inside
2317-24	1312646	2	CLIP, to control *(manual does not show this as 2317-24)*
2317-30	NOT 56J		
2317-31	NOT 56J		
2317-32	1312647	2	SEPARATOR, door inside handle
2317-33	NOT 56J		
2317-34	267313	2	SPRING, remote control to trim foundation
			2317C - Door Remote Controls
2317-35	1314346	1	CONTROL, right door remote
	1314347	1	CONTROL, left door remote
	- - - -	4	SCREW and WASHER, to door No. 12 - 24 x 3/8"
2317-38A	309484	1	LINK, right door remote control
	309485	1	LINK, left door remote control
	297837	2	WASHER, spring 17/64"
	- - - -	2	RIVET, to remote control 3/16" x 5/16"
2317-38B	NOT 56J		
2317-39	NOT 56J		
2317-48	310086	2	SILENCER, door remote control - felt
	- - - -	4	RIVET, to link 9/64" x 1/2"
2317-49	NOT 56J		
			2317D - Door Locking Controls
2317-58	303894	2	ROD, door lock push - K
	1903x2	1	CLIP, right door rod
	1902x2	1	CLIP, left door rod
2317-62	304771	2	ANTI-RATTLER, push rod
2317-64	297803x6	2	KNOB, door locking push rod - K-J Black

* - Use as required

▲ - Not available

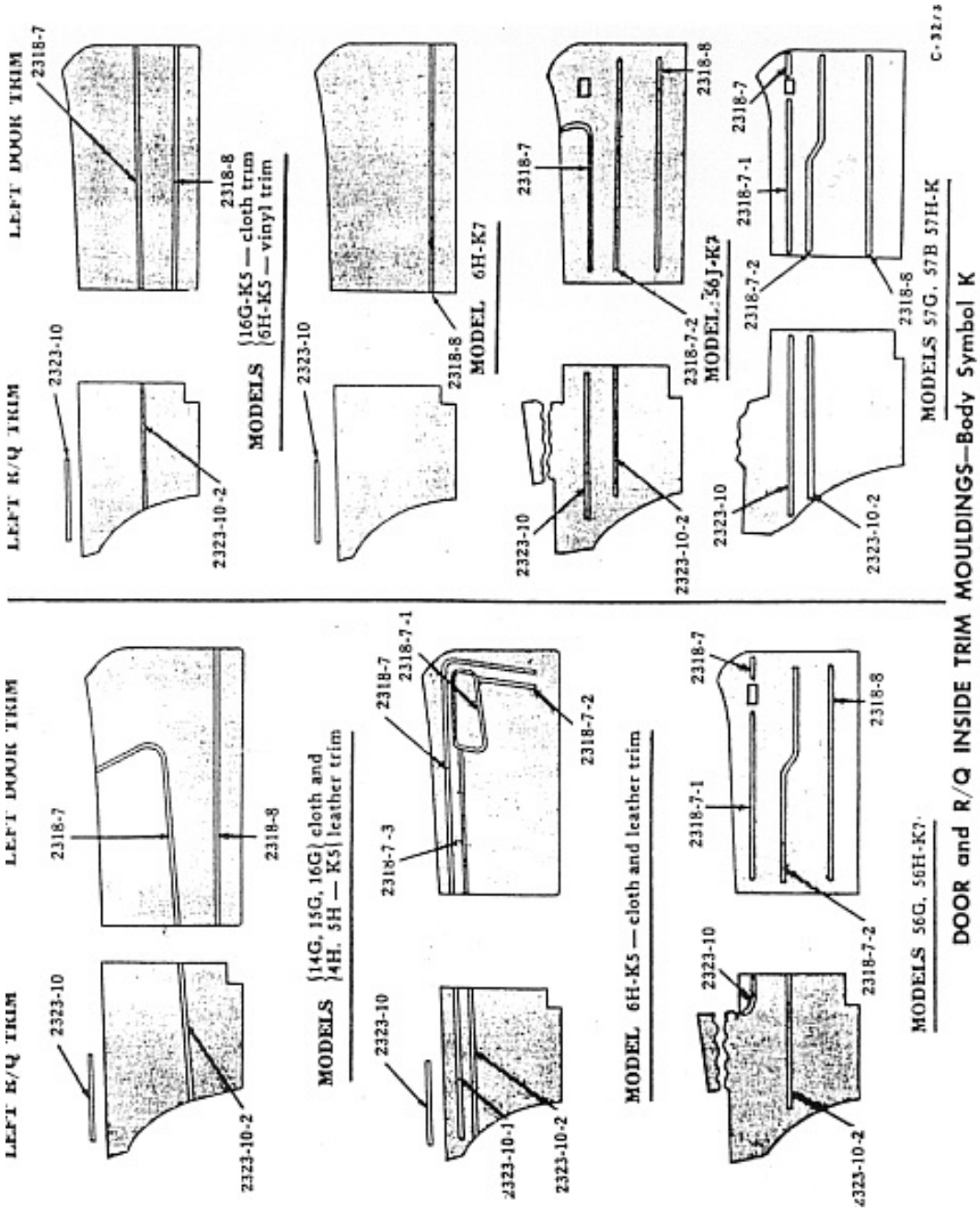
LEFT DOOR TRIM
LEFT R/Q TRIM
2318-7
2318-8
2323-10
2323-10-2
MODELS {16G-K5 — cloth trim
{6H-K5 — vinyl trim
MODEL 6H-K7
MODEL 56J-K7
MODELS 57G, 57B 57H-K
MODELS {14G, 15G, 16G} cloth and
{4H, 5H — K5} leather trim
2318-7-1
2318-7-2
2318-7-3
2323-10-1
MODEL 6H-K5 — cloth and leather trim
MODELS 56G, 56H-K7
C-3273
DOOR and R/Q INSIDE TRIM MOULDINGS—Body Symbol K

ILLUST. NUMBER	PART NUMBER	PER CAR	DESCRIPTION

2318 - DOOR ARM REST AND INSIDE TRIM MOULDINGS (Plates 23-2, 22)

2318A - Door Arm Rests

2318-2	NOT 56		DOOR ARM RESTS ARE PART OF THE DOOR PANEL

2318B - Door Inside Trim Mouldings

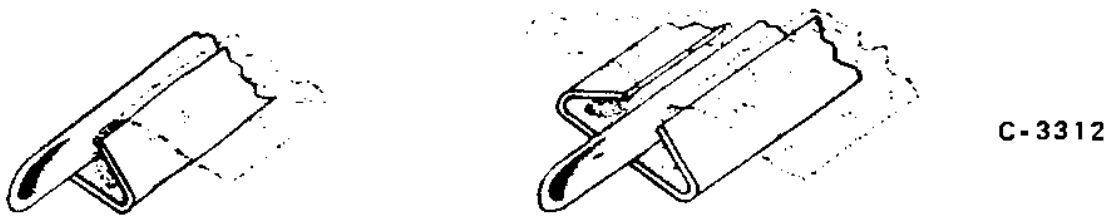

INSIDE DOOR TRIM MOULDINGS

The above type mouldings are not available. After trim is inserted under flange, the flange is pressed down tightly securing the trim. Any effort to remove would result in the destroying of both moulding and trim. The following mouldings include fasteners.

2318-7	1313128	1	MOULDING, upper, right door
	1313129	1	MOULDING, upper, left door
2318-7-2	1313132	2	MOULDING, center, door
2318-8	1313104	2	MOULDING, lower, door
	1917x1	*	FASTENER, door trim foundation

2319 - DOOR SILL FINISHING PLATES AND BODY SILL PANEL MOULDINGS (Plate 23-2)

The following door sill finishing plates are aluminum and are fastened to sill panel in door opening.

2319-1	303584	1	PLATE, right door sill
	303585	1	PLATE, left door sill
	2049x1	10	SCREW, to sill No. 6 x 1/2"

* - Use as required
▲ - Not available

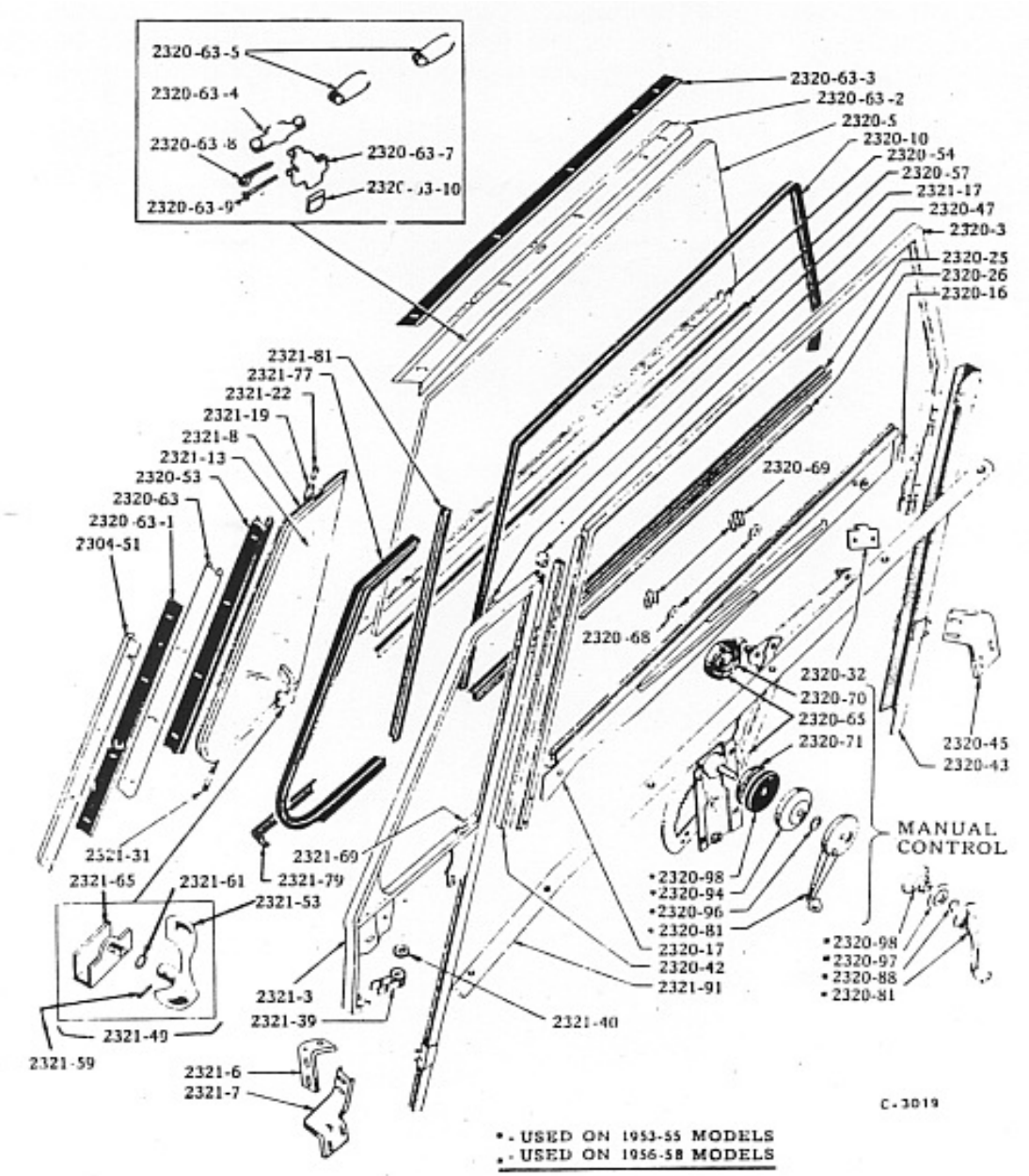

RIGHT DOOR WINDOW and REGULATOR MECHANISM
Body Symbol K

TYPICAL ELECTRIC WINDOW LIFTS
From page 314 - Body Parts Manual

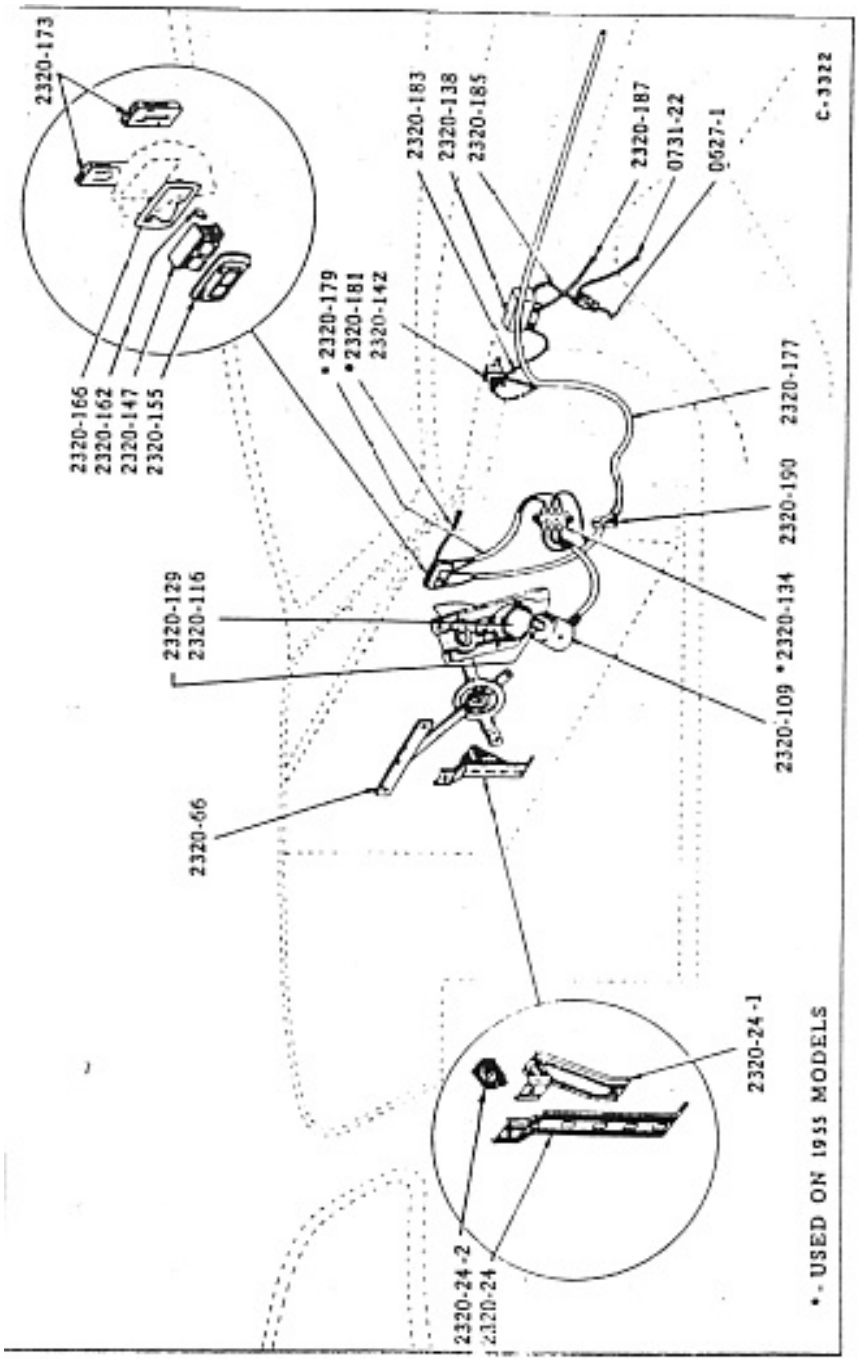

TYPICAL ELECTRIC WINDOW LIFTS—Body Symbol K

ILLUST. NUMBER	PART NUMBER	PER CAR	DESCRIPTION	
2320 - DOOR WINDOWS, CHANNELS, RUNS, WEATHERSEALS, REGULATORS, AND HANDLES (Plates 23-24, 26)				
			2320A - Door Windows	
			Door window w/frame includes glass, lift channel, frame and rollers, and cushions.	
	303260	1	WINDOW w/FRAME, right door - K	
	303261	1	WINDOW w/FRAME, left door - K	
	303262	1	WINDOW w/FRAME, right door (colored glass) - K	
	303263	1	WINDOW w/FRAME, left door (colored glass) - K	
2320-3	304476	1	FRAME and ROLLERS, right door window glass - K	
	304477	1	FRAME and ROLLERS, left door window glass - K	
2320-5	303264	2	GLASS, door window - K	
2320-5	303265	2	GLASS, door window (colored) - K	
2320-10	1770x1	2	CUSHION, upper and sides, door window glass - K	
2320-16	287645	2	SPRING, frame roller center wheel tension - K	
			2320B - Door Window Lift and Division Channels	**Type Controls**
2320-17	303270p	1	CHANNEL, right door window glass - K	
	303271p	1	CHANNEL, left door window glass - K	
	- - - -	8	SCREW, to frame No. 8 - 32 x 5/16"	
2320-24	310089p	2	BRACKET, window stop - K	Electric
	- - - -	4	BOLT, to inner panel 1/4" - 28 x 3/4"	
	- - - -	4	NUT and WASHER, 1/4" - 28	
2320-24-1	310087p	2	STOP, window bracket - K	Electric
	- - - -	4	BOLT, stop to bracket 1/4" - 28 x 1/2"	
	- - - -	4	NUT and WASHER, 1/4" - 28	
	- - - -	4	WASHER, lock 1/4"	
2320-24-2	310090	2	BUMPER, window stop - rubber - K	Electric
2320-25	1992x1	2	WEATHERSTRIP, door window glass channel - rubber - K	
2320-26	304187	2	FILLER, door window glass channel - wood - K	
	- - - -	2	BOLT, door glass frame stop 3/8" - 16 x 1/2" - K	
	g120377	2	NUT, hex. 3/8" - 16	
	- - - -	2	WASHER, underhead, shakeproof 3/8"	
	g138489	2	WASHER, shakeproof 3/8"	
2320-32	304394	2	BRACKET, door window stop - K	Manual
	- - - -	4	SCREW and WASHER, to inner panel No. 12 - 24 x 3/8"	
			2320C - Door Window Guide	
2320-42	304181	2	LINER, door window frame front guide - K	
2320-43	303416	1	GUIDE, rear, right door window - K	
	303417	1	GUIDE, rear, left door window - K	
	- - - -	2	SCREW and WASHER, upper, to door 1/4" - 20 x 3/8"	
	g120375	4	NUT, lower, to bracket 1/4" - 20	
	g121753	4	WASHER, shakeproof 1/4"	
2320-45	303380	1	BRACKET, right door window frame rear guide - K	
	303381	1	BRACKET, left door window frame rear guide - K	
	1960x2	4	SCREW and WASHER, to door 1/4" - 20 x 5/8"	
	g120375	4	NUT, hex. 1/4" - 20	
	g121753	4	WASHER, shakeproof 1/4"	
2320-47	304804	2	STOP, door window - K	
	- - - -	4	SCREW, to ventilator frame No. 6 - 32 x 1/4"	

ILLUST. NUMBER	PART NUMBER	PER CAR	DESCRIPTION
			2320D - Door Window Weatherseals
2320-53	306186	1	WEATHERSEAL, front side, right - K
	306187	1	WEATHERSEAL, front side, left - K
2320-54	304563	2	WEATHERSEAL, lower outer - K
2320-57	304562	2	WEATHERSEAL, lower inner - K
	1624x1	28	FASTENER, lower weatherseal - K
2320-63	299976	1	RETAINER, front side, right - K
	299977	1	RETAINER, front side, left - K
	- - - -	8	SCREW, front side to w/s post No. 6 - 18 x 3/8"
2320-63-1	299983	2	GASKET, front side retainer - K
(2304-51)	- - - -	2	MOULDING, door opening front upper weatherseal (see Group 2304)
2320-63-2	303710	1	WEATHERSTRIP, upper, right door open. (flipper type) - K
	303711	1	WEATHERSTRIP, upper, left door open. (flipper type) - K
	2049x16	10	SCREW, to roof No. 8 x 1/2"
2320-63-3	299984	2	GASKET, door open. weatherstrip - K
2320-63-4	303981	2	SPRING, front tension - K
2320-63-5	303982	2	SPRING, center and rear, right door tension - K
	303983	2	SPRING, center and rear, left door tension - K
2320-63-7	303974	2	STRIKER, weatherstrip - K
2320-63-8	304403	2	PIN, striker to flipper - K
2320-63-9	303978	2	PIN, striker to link - K
2320-63-10	306000	2	COVER, weatherstrip striker - rubber - K
2320-65	1314352	1	REGULATOR, right - K
	1314353	1	REGULATOR, left - K
	- - - -	8	SCREW and WASHER, to door No. 12 - 24 x 3/8"
	1908x1	8	WASHER, sealer
2320-68	281089	4	WASHER, door window regulator arm stud
2320-69	285030	4	CLIP, to stud
2320-70	287233	2	SPRING, window regulator balance - K
2320-71	310844	2	SEAL, window regulator to inner panel
			2320E - Door Window Regulators - Electric Type Control
			The following regulators are less motor and drive assy.
2320-66	310128	1	REGULATOR, right door window - K
	310129	1	REGULATOR, left door window - K (Illust. plate 23-26)
	- - - -	8	SCREW and WASHER, to door 1/4" - 20 x 3/8" - K
	- - - -	4	SCREW and WASHER, idler arm to door 1/4" - 20 x 1/2" - K
	- - - -	12	WASHER, sealer - rubber
2320-68	281089	4	WASHER, door window regulator arm stud
2320-69	285030	4	CLIP, to stud
2320-70	309470	2	SPRING, window regulator balance
			2320F - Door Window Regulator Handles - Manual Control
2320-81	1312643x1	2	HANDLE, door window regulator - K-J
2320-88	1312646	2	CLIP, to regulator
2320-94	NOT 56J		
2320-96	NOT 56J		
2320-97	1312647	2	SEPARATOR, handle to trim foundation
2320-98	267313	2	SPRING, regulator to foundation - K-J8

ILLUST. NUMBER	PART NUMBER	PER CAR	DESCRIPTION
			2320G - Electric Window Lift Motor, Wiring and Controls (Plate 23-26)
			Motor, Gear Box and Relays
2320-109	1312250	2	MOTOR, window lift
	- - - -	4	SCREW and WASHER, hex. to plate 1/4" - 28 x 1/2"
2320-116	310068	1	GEAR BOX, right door regulator (Incl. housing and gears)
2320-116	310069	1	GEAR BOX, left door regulator (Incl. housing and gears)
	- - - -	6	SCREW, to regulator No. 12 x 7/8"
2320-129	310081	2	COUPLING, door motor to gear box
2320-134	NOT 56J		
2320-138	1312029	1	RELAY, ignition switch
	g177999	2	SCREW, mounting No. 14 - 14 x 1/2"
	- - - -	3	SCREW, terminal No. 10 - 32 x 3/8"
2320-142	1314144	1	CIRCUIT BREAKER, window lift (2 window control)
	- - - -	2	SCREW, mounting No. 8 - 15 x 3/8"
	g120614	2	NUT, hex. terminal No. 10 - 32
	- - - -	2	WASHER, terminal lock No. 10
			Switches
			All switches are less housing
			Type Switch / **Finish**
2320-147	310425x1	1	SWITCH, right door (1-button) Chrome
2320-147	310426x1	1	SWITCH, left door (2-button) Chrome
	g134530	*	NUT, hex. terminal No. 6 - 32
	- - - -	*	WASHER, terminal lock No. 6
2320-155	308454w	1	HOUSING, right door switch (1-button) Chrome
2320-155	308455w	1	HOUSING, left door switch (2-button) Chrome
2320-162	308460	8	CLIP, switch and housing retainer
2320-166	308457	1	PLATE, right door switch mounting (1-button)
2320-166	308458	1	PLATE, left door switch mounting (2-button)
2320-173	311056x1	2	SPACER, door reg. to foundation - wood 5/8" x 5/8" x 1-1/2"
2320-173	311056x2	2	SPACER, door reg. to foundation - wood 3/4" x 3/4" x 1-1/2"
			Wiring
			Window Control
2320-177	1312324	1	HARNESS, door window wiring Two
	536795	3	CLIP, to dash
2320-179	NOT 56J		
2320-181	NOT 56J		
2320-183	310436	1	CABLE, circuit breaker to ignition relay Two
2320-185	530314	1	CABLE, ign. relay to chassis cable (not used w/O.D.)
	192546	1	CONNECTOR, cables
2320-187	307803x3	1	CABLE, ignition relay to starter solenoid - K
2320-190	310174	2	PROTECTOR, door wire
	2049x15	4	SCREW, to pillar No. 8 x 3/8"

ILLUST. NUMBER	PART NUMBER	PER CAR	DESCRIPTION

2320H - Electric Window Lift Motor Parts

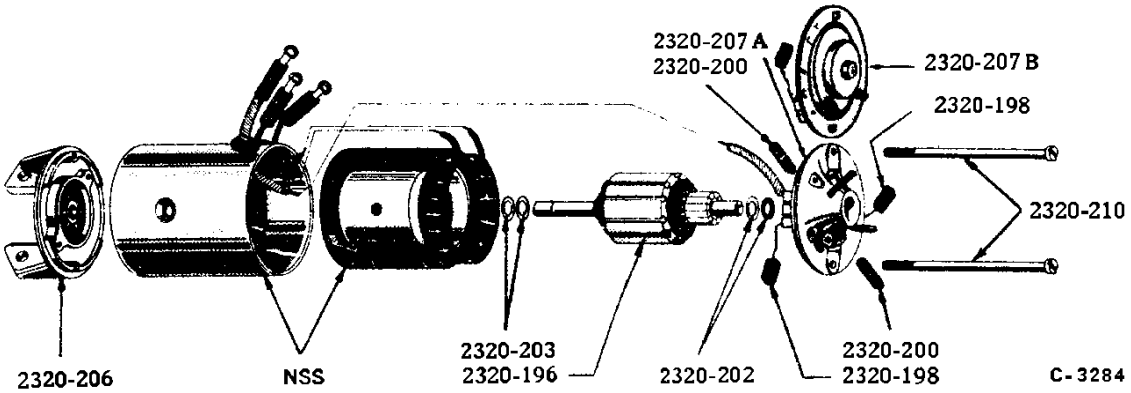

ELECTRIC WINDOW LIFT MOTOR

	- - - -	2	MOTOR, window lift - see motor, Group 2320G
2320-196	1312975	2	ARMATURE, motor
2320-198	311353	4	BRUSH, motor
2320-200	1312213	4	SPRING, brush
2320-202	311361	*	WASHER, armature thrust - thin
2320-202	311362	*	WASHER, armature thrust - thick
2320-203	311364	*	WASHER, armature drive end thrust
2320-206	311347	2	HEAD, drive end
2320-207A	NOT 56J		
2320-207B	1312959	2	HEAD, commutator end (incl. brushes)
2320-210	1312906	4	BOLT, motor case thru

2321 - DOOR WINDOW VENTILATORS AND GARNISH MOULDINGS (Plates 23-24, 26)

	304800	1	VENTILATOR w/OUTER FRAME, right door - K
	304801	1	VENTILATOR w/OUTER FRAME, left door - K
	304802	1	VENTILATOR w/OUTER FRAME, right door (colored glass) - K
	304803	1	VENTILATOR w/OUTER FRAME, left door (colored glass) - K
2321-3	304478	1	FRAME, right door vent. outer - K
	304479	1	FRAME, left door vent. outer - K
	512709	4	SCREW, door to frame 5/16" - 18 x 3/4"
	g120375	6	NUT, to door 1/4" - 20
	- - - -	4	WASHER, lock 5/16"
	g121753	6	WASHER, lock 1/4"
2321-6	303492	1	BRACKET, front, right door vent. frame - K
	303493	1	BRACKET, front, left door vent. frame - K
	- - - -	4	BOLT, to door
	1743x1	4	SPEED NUT
	g138485	4	WASHER, shakeproof 5/16"
2321-7	303382	1	BRACKET, rear, right door vent. frame - K
	303383	1	BRACKET, rear, left door vent. frame - K
	1960x2	4	BOLT, to door
	g120375	4	NUT, hex. 1/4" - 20
	g121753	4	WASHER, shakeproof 1/4"
2321-8	303426	1	VENTILATOR, right door - K
	303427	1	VENTILATOR, left door - K
2321-8	303428	1	VENTILATOR, right door (colored glass) - K
	303429	1	VENTILATOR, left door (colored glass) - K
2321-13	303342	2	GLASS, door vent. - K

ILLUST. NUMBER	PART NUMBER	PER CAR	DESCRIPTION
2321-13	303343	2	GLASS, door vent. (colored) - K
	1479x9	2	CUSHION, door vent. glass - K
2321-17	304000w	1	BRACKET, upper, right door vent. upper pivot (on outer frame) - K
	304001w	1	BRACKET, upper, left door vent. upper pivot (on outer frame) - K
	- - - -	4	RIVET, to frame 9/64" x 9/32"
2321-19	304002w	1	BRACKET, lower, right door vent. upper pivot (on inner frame) - K
	304003w	1	BRACKET, lower, left door vent. upper pivot (on inner frame) - K
	- - - -	4	RIVET, to frame 9/64" x 9/32"
2321-22	304294	2	SCREW, upper pivot brkt. to brkt. 1/4" - 28
2321-31	303374	1	PIVOT, lower, right door vent. - K
	303375	1	PIVOT, lower, left door vent. - K
	- - - -	4	RIVET, to frame 9/64" x 5/16"
2321-39	295796	2	SPRING and BEARING, door vent. lower pivot tension - K-J
	- - - -	2	SCREW, to vent. brkt. No. 10 - 32 x 5/8" - K
2321-40	304374	2	WASHER, to thrust - K-J
2321-49	290770	1	HANDLE w/BRACKET, right door vent. - K
	290771	1	HANDLE w/BRACKET, left door vent. - K
2321-53	290296w	1	HANDLE, right door vent. - K
	290297w	1	HANDLE, left door vent. - K
2321-59	265709	2	PIN, to shaft 3/32" x 1/2"
2321-61	1463x1	2	WASHER, spring 11/32" I.D.
2321-65	290772	2	SHAFT and BRACKET, vent. handle - K
	- - - -	4	RIVET, to frame 1/8" x 7/32"
2321-69	290773	2	BRACKET, locking (welded to outer frame) - K
2321-77	303340	1	WEATHERSTRIP, front, right door vent. - K
	303341	1	WEATHERSTRIP, front, left door vent. - K
2321-79	307546	1	WEATHERSTRIP, right, lower extension - K
	307547	1	WEATHERSTRIP, left, lower extension - K
2321-81	303389	2	WEATHERSTRIP, rear, door vent. - K
	- - - -	8	RIVET, rear to outer frame 1/8" x 5/32"
2321-91	303834	1	MOULDING, right garnish - K3-K5-K7
	303835	1	MOULDING, left garnish - K3-K5-K7
	g148543	12	SCREW, to door No. 8 - 3/4"

ILLUST. NUMBER	PART NUMBER	PER CAR	DESCRIPTION

2323 - REAR QUARTER AND REAR CENTER SEAT ARM RESTS, INSIDE TRIM MOULDINGS
(Plate 23-2, 22)

2323A - Rear Quarter Arm Rests

2323-2	NOT 56J		(The rear quarter arm rest is a moulded part of the panel)

2323B - Rear Quarter Trim Moulding

C-3312

REAR QUARTER TRIM MOULDINGS

The above type mouldings are not available. After trim is inserted under flange, the flange is pressed down tightly securing the trim. Any effort to remove would result in the destroying of both moulding and trim. The following mouldings include fasteners.

2323-10	1313113	2	MOULDING and FASTENER, upper, r/q
	1313134	1	MOULDING, lower, right r/q
2323-10-2	1313135	1	MOULDING, lower, left r/q

2323C - Rear Seat Center Arm Rests

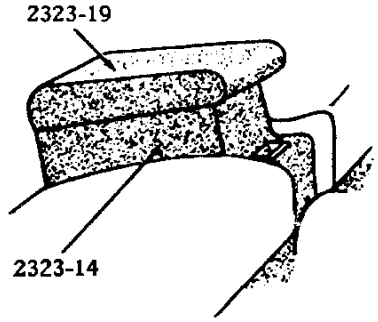

MODELS 14G, 4H

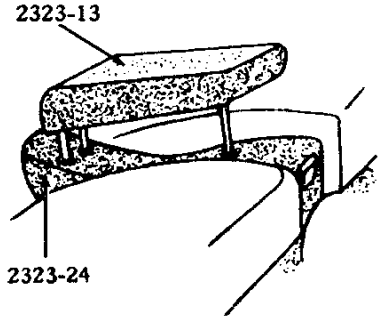

MODELS 15G, 5H

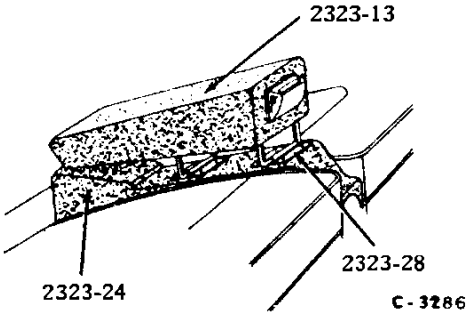

MODELS 16G, 6H, 56G, 56H, 56J
MODELS 57G, 57B, 57H, 58L

2323-13	308687t	1	ARM REST, rear seat center
2323-14	NOT 56J		
2323-19	NOT 56J		
2323-24	308833t	1	BASE, arm rest
	g161901	6	SCREW, to floor No. 10 x 5/8"
2323-28	308698	2	BRACKET, arm rest hinge to base
	308712	2	PLATE, hinge bracket
	g271166	8	NUT and WASHER, hex. No. 10 - 24

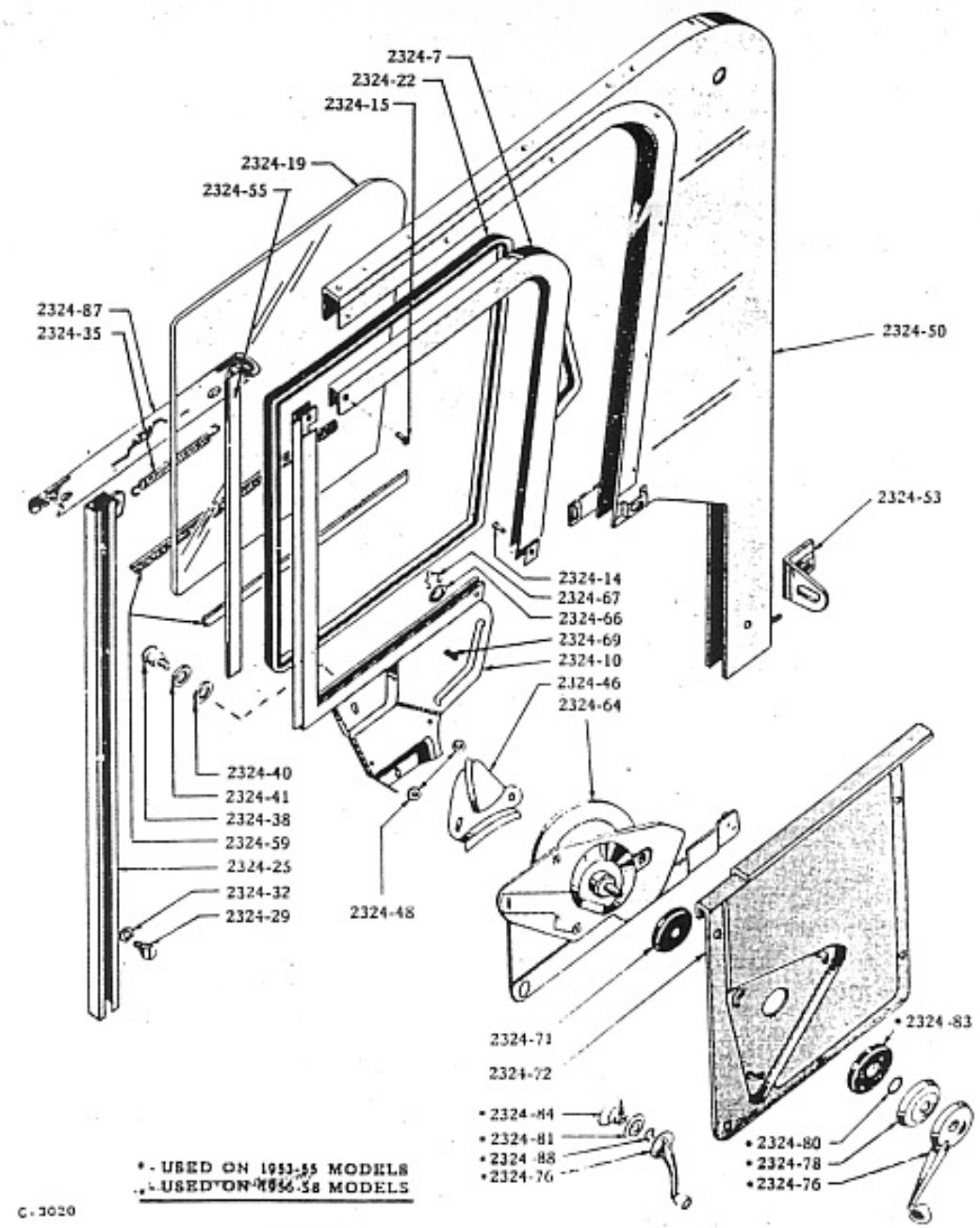

RIGHT REAR QUARTER WINDOW and
REGULATOR MECHANISM—Body Symbol K

ILLUST. NUMBER	PART NUMBER	PER CAR	DESCRIPTION

2324 - REAR QUARTER WINDOWS, CHANNELS, RUNS, WEATHERSEALS, REGULATORS AND GARNISH MOULDINGS (Plate 23-28)

Rear quarter window w/frame includes frame, glass, cushion and lift channel.

2324A - Rear Quarter Windows

	303654	1	WINDOW w/FRAME, right rear quarter - K
	303655	1	WINDOW w/FRAME, left rear quarter - K
	303658	1	WINDOW w/FRAME, right rear quarter (colored glass) - K
	303659	1	WINDOW w/FRAME, left rear quarter (colored glass) - K
2324-7	304742	2	FRAME, rear and upper half - K
2324-10	304470	1	FRAME and LIFT CHANNEL, front and lower half, right window - K
	304471	1	FRAME and LIFT CHANNEL, front and lower half, left window - K
	- - - -	2	BOLT, lower rear No. 6 - 32 x 7/16"
	- - - -	2	BOLT, upper front No. 6 - 32 x 5/16"
2324-14	303793	2	NUT, sleeve, lower rear bolt No. 6 - 32
2324-15	303792w	2	NUT, sleeve, upper front bolt No. 6 - 32
2324-19	303714	2	GLASS, window - K
2324-19	303715	2	GLASS, window (colored) - K
2324-22	1770x1	2	CUSHION, window - 51" long (cut to length desired) - K

2324B - Rear Quarter Window Guide and Run

2324-25	302884	1	GUIDE, right r/q window vertical - K
	302885	1	GUIDE, left r/q window vertical - K
2324-29	303615	2	SCREW, pivot, to r/q
	- - - -	2	WASHER, spring .332 I.D.
2324-32	299288	2	WASHER, spacing
2324-35	303662p	2	SPRING, vertical guide - K
2324-38	307554	4	STUD, r/q window vertical guide 5/16" - 24 x 27/32" - 2nd type - K
	g120368	4	NUT, to glass lift channel 5/16" - 24
2324-40	280821	4	WASHER, inner - leather 1-1/16" O.D.
2324-41	307555	4	WASHER, outer square - fibre - K
	- - - -	4	WASHER, shakeproof 5/16"
2324-46	303660	1	GUIDE, right r/q window horizontal - K
	303661	1	GUIDE, left r/q window horizontal - K
	- - - -	4	SCREW, to lift channel 1/4" - 20 x 1/2"
2324-48	299288	4	WASHER, spacing
2324-50	303496	1	RUN, right r/q window - K
2324-50	303497	1	RUN, left r/q window - K
	g161895	4	SCREW, to body No. 10 x 1/2"
	- - - -	4	SCREW, to body No. 8 x 1/2"
	- - - -	2	BOLT, weld, to bracket 1/4" - 20 x 1/2"
	- - - -	2	SPEED NUT (incl. in 303496-7)
	- - - -	2	NUT, hex. 1/4" - 20
	- - - -	2	WASHER, plain 1/4"
	- - - -	2	WASHER, lock 1/4"
2324-53	303734	2	BRACKET, r/q window run - K
	- - - -	2	SCREW, to r/q 1/4" - 20 x 1/2"
	- - - -	2	WASHER, plain 1/4"

ILLUST. NUMBER	PART NUMBER	PER CAR	DESCRIPTION
			2324C - Rear Quarter Window Weatherseals
2324-55	303708	1	WEATHERSEAL, front, right - K
2324-55	303709	1	WEATHERSEAL, front, left - K
2324-59	303827	4	WEATHERSEAL, lower, r/q window - K
	1624x1	12	CLIP, to r/q
2324-64	1314358	1	REGULATOR, right - K
	1314359	1	REGULATOR, left - K
	- - - -	6	SCREW, to panel No. 12 - 24 x 3/8"
2324-66	281089	2	WASHER, regulator arm stud - K
2324-67	285030	2	CLIP, to stud - K
2324-69	303663	2	PIN, regulator stop (peened to lift channel) - K
2324-71	NOT 56J		
2324-72	304698p	1	PANEL, right r/q window regulator - K
	304699p	1	PANEL, left r/q window regulator - K
	- - - -	10	SCREW, lower and sides, to r/q 1/4" x 3/8"
	- - - -	4	SCREW, upper, to r/q No. 6 x 3/8"
			2324E - Rear Quarter Window Regulator Handles
2324-76	1312643x1	2	HANDLE, regulator
2324-78	NOT 56J		
2324-80	278667	2	RING, handle to separator
2324-81	1312647	2	SEPARATOR, handle to foundation
2324-83	NOT 56J		
2324-84	267313	2	SPRING, regulator to foundation
2324-88	1312646	2	CLIP, to regulator
			2324F - Rear Quarter Window Garnish Mouldings
2324-87	303836	1	MOULDING, right - K
	303837	1	MOULDING, left - K
	g148543	4	SCREW, to r/q No. 8 x 3/4"

* - Use as required
▲ - Not available

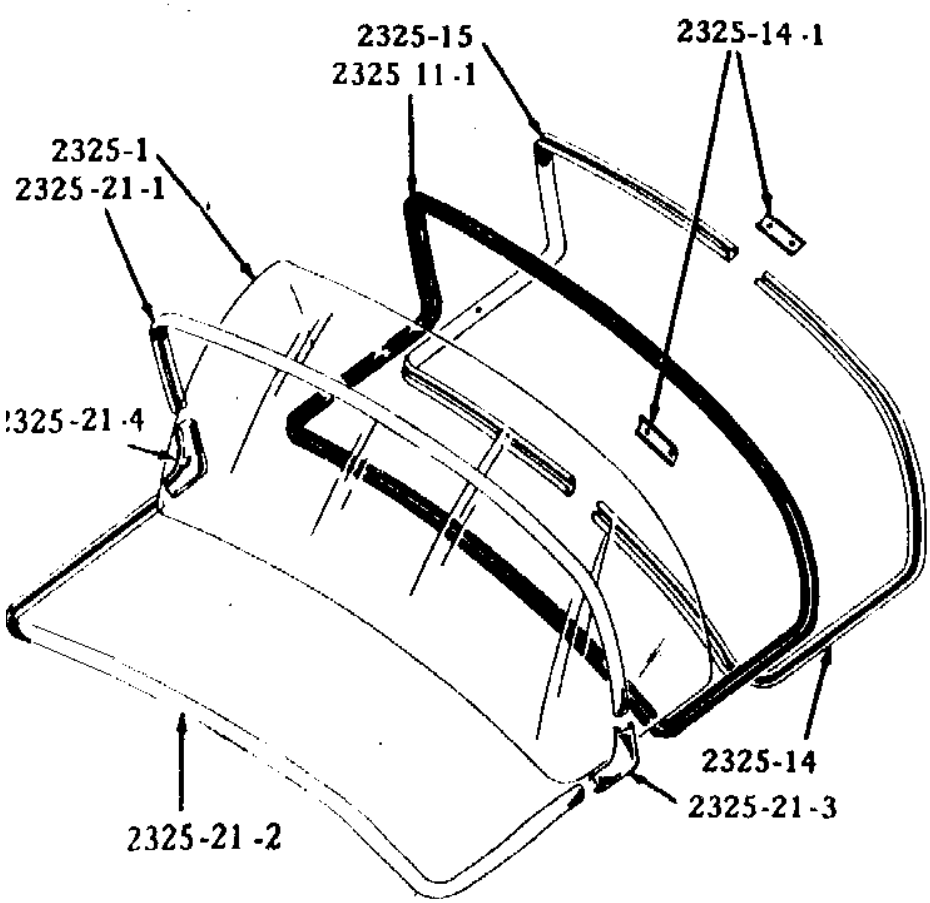

BODY SYMBOL K

BACK WINDOW and MOULDINGS

ILLUST. NUMBER	PART NUMBER	PER CAR	DESCRIPTION

2325 - BACK WINDOW, GARNISH MOULDING, ETC. (Plate 23-30)

2325-1	303783	1	GLASS, window - K - U.S.A.
			When replacing glass, 1 - 2035x1 weatherstrip must also be ordered. If only the weatherstrip is replaced use 304716 weatherstrip.
2325-1	303784	1	GLASS, window (colored) - K - U.S.A.
			When replacing glass, 1 - 2035x1 weatherstrip must also be ordered. If only the weatherstrip is replaced use 304716 weatherstrip.
2325-11-1	2035x1	1	WEATHERSTRIP, window - rubber - U.S.A.
			When replacing glass, 1 - 2035x1 weatherstrip must also be ordered. If only the weatherstrip is replaced use 304716 weatherstrip.
2325-14	311216	1	MOULDING, right, garnish - K
2325-14-1	298268w	2	CLIP, garnish moulding
	g148543	14	SCREW, side and top, moulding and clip No. 6 x 3/4"
	- - - -	8	SCREW, bottom, moulding and clip No. 6 x 1"
2325-15	311217	1	MOULDING, left, garnish - K
2325-21-1	1312531	1	MOULDING, upper, reveal - K7-K9
	1312583	9	CLIP, moulding fastening (for 1312531)
	308565x1	9	NUT, hex. No. 10 - 24 (incl. washer and sealer) (for 1312531)
2325-21-2	303571	1	MOULDING, lower, reveal - K
2325-21-3,4	1312170	2	MOULDING, corner, reveal - K

* - Use as required
▲ - Not available

FRONT SEAT and ADJUSTING MECHANISM
ELECTRICALLY OPERATED SEATS
From page 326 - Body Parts Manual

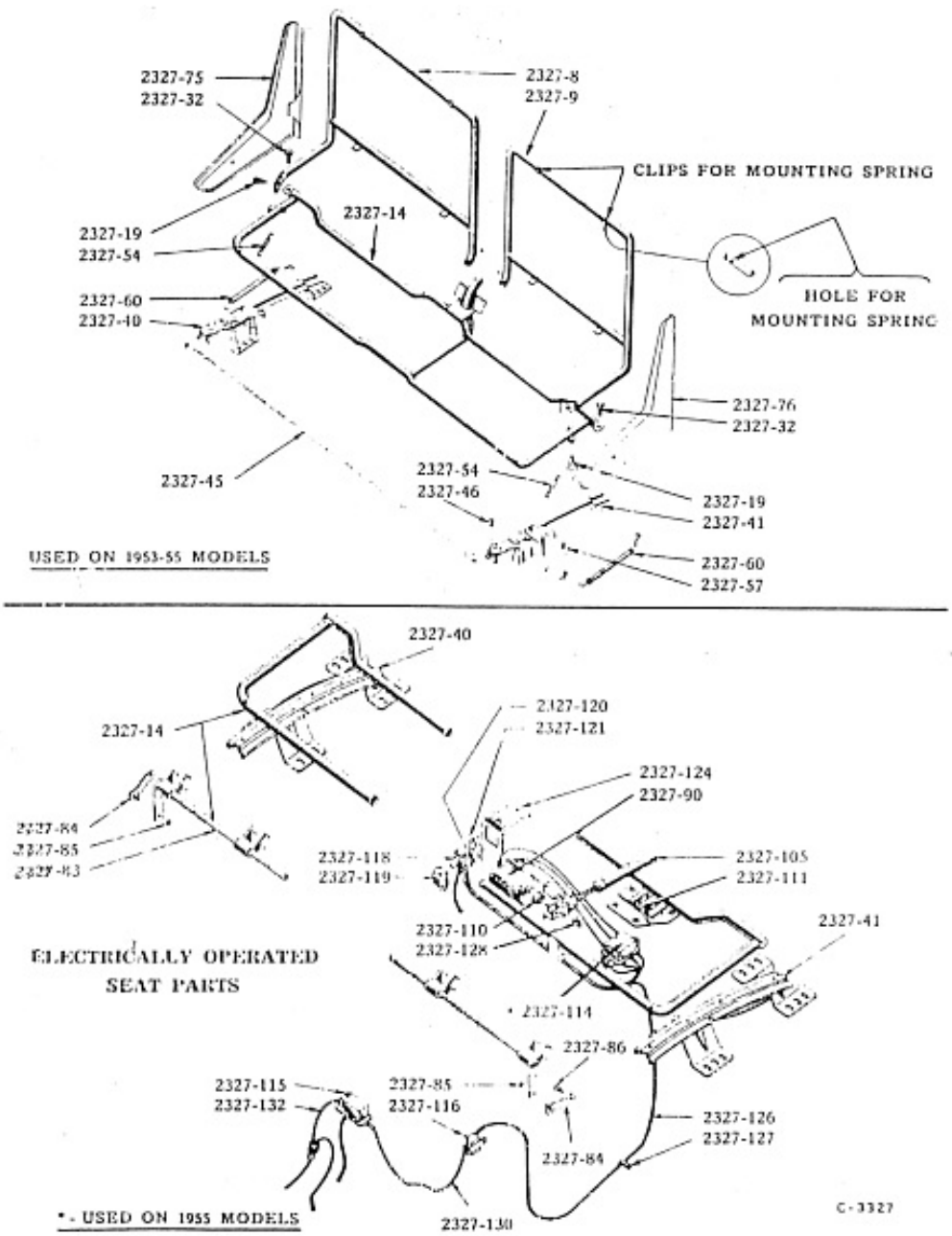

FRONT SEAT and ADJUSTING MECHANISM

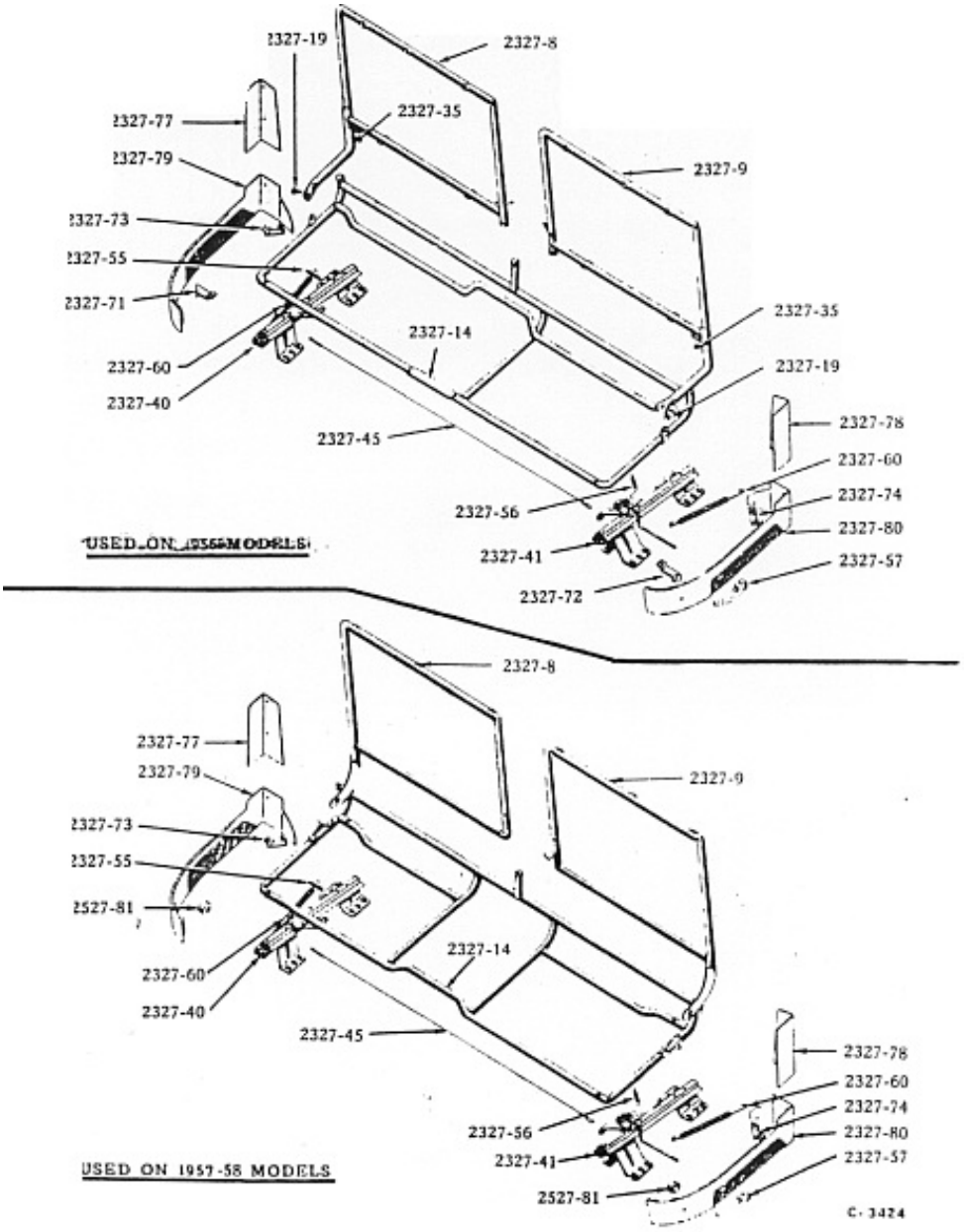

TYPICAL FRONT SEAT and ADJUSTING MECHANISM

Page no. 230

ILLUST. NUMBER	PART NUMBER	PER CAR	DESCRIPTION	Operation
2327 - FRONT SEAT (Plates 23-31, 32)				
			Seat complete, seat cushions, cushion covers, backs and back covers must be ordered by description. To assure the correct trim, car serial, body symbol and number must be furnished.	
2327-8	1314092p	1	FRAME, right seat back	
2327-9	1314093p	1	FRAME, left seat back	
2327-14	1314101p	1	FRAME, seat bottom	Manual
2327-14	1314139	1	FRAME, seat bottom	Electric
2327-19	304458	2	STUD, seat back side hinge pivot	
	g124829	2	NUT, hex. 3/8" - 16	
	- - - -	2	WASHER, lock 3/8"	
2327-35	1314055	2	STOP, seat back frame	
	- - - -	2	SCREW, to frame 1/4" - 28 x 1/2"	
2327-40	1314030	1	TRACK COMPLETE, right seat adj.	Manual
2327-40	1314162	1	TRACK COMPLETE, right seat adj.	Electric
2327-41	1314031	1	TRACK COMPLETE, left seat adj.	Manual
2327-41	1314163	1	TRACK COMPLETE, left seat adj.	Electric
	- - - -	4	SCREW, frame to track 5/16" - 18 x 1-1/2"	
	1950x5	8	SCREW, track to floor 5/16" - 18 x 1-3/8"	
2327-45	1314170	1	WIRE and FERRULE, track connecting - manual oper.	
2327-55	653033p	1	SPRING, right, seat adj. track lock	Manual
2327-56	653073	1	SPRING, left, seat adj. track lock	Manual
2327-57	1314040x1	1	HANDLE, seat adj. track lock	Manual
	- - - -	1	SCREW, to lever No. 8 - 32 x 7/16"	
2327-60	298824p	2	SPRING, seat pullback	
			Seat frames constructed with 1" O.D. tubing	
2327-71	1314194	1	BRACKET, front right, side panel	
2327-72	1314195	1	BRACKET, front left, side panel	
2327-73	1314192	1	BRACKET, rear right, side panel	
2327-74	1314193	1	BRACKET, rear left, side panel	
			Vinyl covered panels used on all U.S.A. cars	
2327-77	1314176x8	1	PANEL, upper right, side trim	Off White
2327-78	1314177x8	1	PANEL, upper left, side trim	Off White
2327-77	1314176x1	1	PANEL, upper right, side trim	Charcoal Black
2327-78	1314177x1	1	PANEL, upper left, side trim	Charcoal Black
2327-77	1314176x4	1	PANEL, upper right, side trim	Dark Blue
2327-78	1314177x4	1	PANEL, upper left, side trim	Dark Blue
2327-77	1314176x5	1	PANEL, upper right, side trim	Dark Green
2327-78	1314177x5	1	PANEL, upper left, side trim	Dark Green
2327-77	1314176x6	1	PANEL, upper right, side trim	Light Rose Mist
2327-78	1314177x6	1	PANEL, upper left, side trim	Light Rose Mist
	- - - -	4	SCREW, to seat No. 8 - 32 x 3/4"	
	- - - -	*	WASHER, finish No. 8	

ILLUST. NUMBER	PART NUMBER	PER CAR	DESCRIPTION
			For Manual Operated Seat
			Vinyl covered panels used on all U.S.A. cars
2327-79	1312492x1	1	PANEL, lower right, side trim — Charcoal Black
2327-80	1312493x1	1	PANEL, lower left, side trim — Charcoal Black
2327-79	1312492x4	1	PANEL, lower right, side trim — Dark Blue
2327-80	1312493x4	1	PANEL, lower left, side trim — Dark Blue
2327-79	1312492x5	1	PANEL, lower right, side trim — Dark Green
2327-80	1312493x5	1	PANEL, lower left, side trim — Dark Green
2327-79	1312492x8	1	PANEL, lower right, side trim — Off White
2327-80	1312493x8	1	PANEL, lower left, side trim — Off White
2327-79	1312492x7	1	PANEL, lower right, side trim — Dark Rose Mist
2327-80	1312493x7	1	PANEL, lower left, side trim — Dark Rose Mist
			(NOTE: Manual shows above item as 1312392x7)
	- - - -	2	SCREW, to seat No. 8 - 32 x 1"
	- - - -	4	SCREW, to seat No. 8 - 32 x 1/2"
2327-81	- - - -	6	WASHER, finish No. 8
			For Electric Operated Seat
2327-79	1312492x1	1	PANEL, lower right, side trim — Charcoal Black
2327-80	1312496x1	1	PANEL, lower left, side trim — Charcoal Black
2327-79	1312492x4	1	PANEL, lower right, side trim — Dark Blue
2327-80	1312496x4	1	PANEL, lower left, side trim — Dark Blue
2327-79	1312492x5	1	PANEL, lower right, side trim — Dark Green
2327-80	1312496x5	1	PANEL, lower left, side trim — Dark Green
2327-79	1312492x8	1	PANEL, lower right, side trim — Off White
2327-80	1312496x8	1	PANEL, lower left, side trim — Off White
2327-79	1312492x7	1	PANEL, lower right, side trim — Dark Rose Mist
2327-80	1312496x7	1	PANEL, lower left, side trim — Dark Rose Mist
	- - - -	2	SCREW, to seat No. 8 - 32 x 1"
	- - - -	4	SCREW, to seat No. 8 - 32 x 1/2"
2327-81	- - - -	6	WASHER, finish No. 8
	1313248	2	MOULDING and RETAINER, seat back panel
	- - - -	4	SCREW, to frame No. 6 x 1/2"
			Electrically Operated Seat Parts
2327-83	310361	1	TUBE, front seat torque - K
	g180085	3	BOLT, to seat frame 5/16" - 18 x 1-3/4"
	- - - -	3	NUT and WASHER, hex. 5/16" - 18
2327-84	311074	2	LINK, torque tube to track
2327-85	311002	2	LOCK RING, to torque tube arm
2327-86	311205	2	BOLT, to track support 5/16" - 24 x 7/8"
	g120368	2	NUT, hex. 5/16" - 24
	- - - -	2	WASHER, plain 11/32"
	g120393	2	WASHER, plain 11/32"
	g120214	2	WASHER, lock 5/16"
2327-90	1314001	1	MOTOR, front seat adjuster
	g120614	2	NUT, to adjuster No. 10 - 32
	- - - -	2	WASHER, lock No. 10
2327-105	310366	1	ADJUSTER, front seat
	- - - -	2	PIN, to seat frame and floor bracket 3/8" x 1-3/4"
	- - - -	2	COTTER PIN 3/32" x 3/4"
2327-110	310449	1	COUPLING, motor to adjuster

ILLUST. NUMBER	PART NUMBER	PER CAR	DESCRIPTION	
2327-111	310895	1	BRACKET, seat adjuster floor	
	- - - -	4	SCREW, to floor 5/16" - 18 x 7/8"	
	- - - -	4	NUT and WASHER 5/16" - 18	
	- - - -	4	WASHER, plain, upper 5/16"	
	268469	4	WASHER, plain, lower	
	- - - -	1	WASHER, plain 11/32"	
2327-114	NOT 56J			
2327-115	1312029	1	RELAY, ignition switch	
	g177999	2	SCREW, fastening No. 14 x 1/2"	
	- - - -	3	SCREW and WASHER, terminal No. 10 - 32 x 3/8"	
2327-116	1314144	1	CIRCUIT BREAKER, relay to adjuster	
	- - - -	2	SCREW, fastening No. 8 x 3/8"	
	g120614	2	NUT, terminal No. 10 - 32	
	- - - -	2	WASHER, lock, terminal No. 10	
2327-118	310425x1	1	SWITCH, front seat adjuster (less housing)	
	g134530	3	NUT, terminal No. 6 - 32	
	- - - -	3	WASHER, lock, terminal No. 6	
2327-119	308454w	1	HOUSING, front seat adjuster switch	
2327-120	308460	4	CLIP, switch and housing retainer	
2327-121	308457	1	PLATE, front seat adjuster switch mounting	
2327-124	311134p	1	BRACKET, front seat adjuster switch mounting	
	g180085	1	BOLT, to seat frame 5/16" - 18 x 1-3/4"	
	- - - -	1	NUT and WASHER, hex. 5/16" - 18	
	g446363	1	WASHER, plain 5/16"	
2327-126	1314142	1	CABLE, circuit breaker to switch	
2327-127	182050	1	CLIP, to floor	
	g177999	1	SCREW, to floor No. 14 x 1/2"	
2327-128	172653	1	CLIP, to adjuster cover	
	- - - -	1	WASHER, plain No. 10	
				Length
2327-130	310436	1	CABLE, circuit breaker to ignition relay	30"
2327-132	530314	1	CABLE, ignition relay to chassis cables - less O.D.	10"
	192546	1	CONNECTOR, cables (3 wire) - less O.D.	
	536756	1	CABLE, ignition relay to O.D. relay - with O.D.	14"
	307803x3	1	CABLE, ignition relay to starter solenoid - K	32"

* - Use as required

▲ - Not available

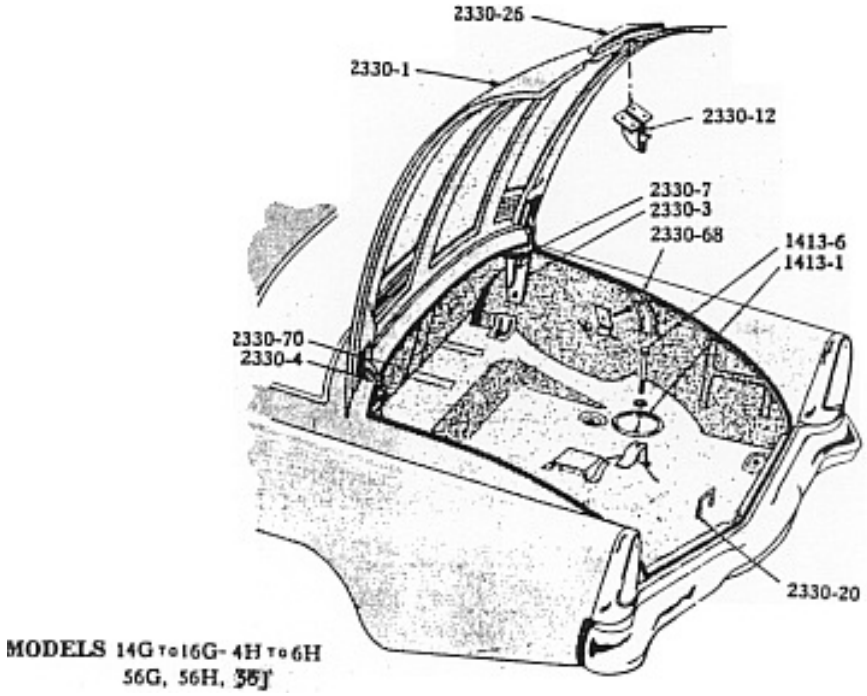

ILLUST. NUMBER	PART NUMBER	PER CAR	DESCRIPTION
2330 - TRUNK OR DECK LID			**(Plates 23-33, 38)**
2330-1	1312055	1	LID, trunk
2330-3	NOT 56J		
2330-4	303030	1	HINGE, less COIL SPRING, right, lid - K
	303031	1	HINGE, less COIL SPRING, left, lid - K
	g180020	8	SCREW, to lid 1/4" - 20 x 3/4" - K-J
	g120392	8	WASHER, plain (for g180020) 9/32" - K
	g120380	8	WASHER, lock (for g180020) 1/4" - K
	g120376	4	NUT, to body 5/16" - 18
	g120393	4	WASHER, plain 5/16"
	g120214	4	WASHER, lock 5/16"
	g120376	2	NUT, to wheelhouse 5/16" - 18
	- - - -	2	WASHER, plain 11/32"
	- - - -	4	WASHER, shakeproof 5/16"
2330-7	311401p	4	SPRING, hinge (15-1/2 coils) - K
2330-12	1312832	1	LOCK or LATCH, lid inside
	- - - -	4	SCREW and WASHER, to lid 5/16" - 24 x 5/8"
2330-20	298092	1	STRIKER, lock
	g180020	2	SCREW, to body 1/4" - 20 x 3/4"
	- - - -	2	WASHER, plain 9/32"
	- - - -	2	WASHER, lock 1/4"
2330-26	NOT 56J		

ILLUST. NUMBER	PART NUMBER	PER CAR	DESCRIPTION

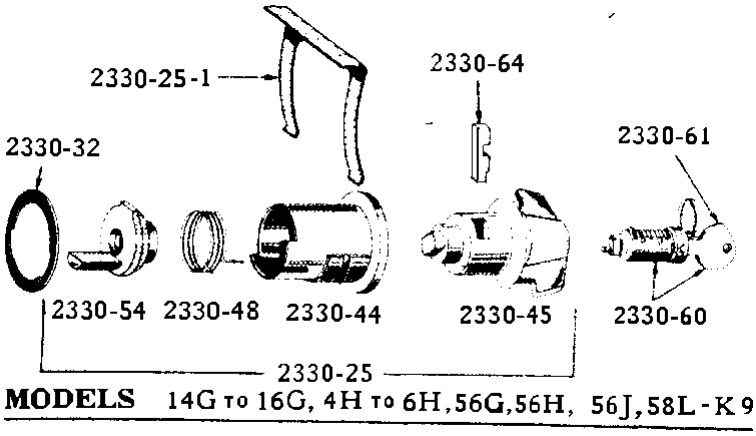

TRUNK LOCK AND HOUSING

2330-25	1312352	1	LOCK and HOUSING, lid outside (less cyl.)	
2330-25-1	297880	1	RETAINER, lock	
2330-32	297881	1	GASKET, outside lock and housing - rubber	
2330-44	307591w	1	HOUSING, outside lock	
2330-45	297876w	1	HOUSING or LEVER, outside lock cyl.	
2330-48	293274	1	SPRING, outside lock cyl. housing or lever	
2330-54	1312353	1	COLLAR or ADAPTER, outside lock	
	1312899	1	SCREW and WASHER, to cyl. No. 10 - 24 x 3/8"	
	1312310	1	KIT, trunk lid & inst. board compartment door lock (Hurd)	
			Consists of: 1 - cylinder, trunk lock;	
			1 - lock, compartment door; 2 - keys.	
2330-60	293609	1	LOCK CYLINDER w/KEYS. lid (Hurd)	
			Not coded to specified key number.	
2330-61	294090	1	KEY, lock (Hurd) specify letter and number	
2330-64	297879	1	PAWL, outside lock	
2330-68	299358	1	WEATHERSTRIP, lid opening - rubber - K	
	289710p	1	COVER, floor pan gasoline gage	
	290206	1	GASKET, gasoline gage cover - paper	
	- - - -	3	SCREW, to floor pan No. 6 x 3/8"	
				Color
2330-70	1313246x1	1	LINER, luggage comp. seat back - U.S.A.	Strato Gray

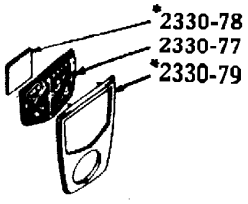

MODELS *56G, *56H, *56J
MODELS 57,58G-B-H

TRUNK EMBLEM, ESCUTCHEON

ILLUST. NUMBER	PART NUMBER	PER CAR	DESCRIPTION	Finish
2330-77	1314309	1	EMBLEM, escutcheon	
2330-78	1312554	1	SPACER, escutcheon emblem	
2330-79	1312439w	1	ESCUTCHEON, lock	
	- - - -	4	CLIP, to lid	
	1314773w	1	NAME PLATE, "Golden"	Chrome
	1314773v	1	NAME PLATE, "Golden"	Gold
	1314765w	1	NAME PLATE, "Hawk" - K3	Chrome
	1314765v	1	NAME PLATE, "Hawk" - K7	Gold
	1314744	7	CLIP, to lid	
	- - - -	1	TRUNK LIGHT EQUIPMENT - see Group AC30	
	- - - -	1	MAT, trunk floor - see Group 2341	

ILLUST. NUMBER	PART NUMBER	PER CAR	DESCRIPTION

2338 - FRONT FLOOR BOARD

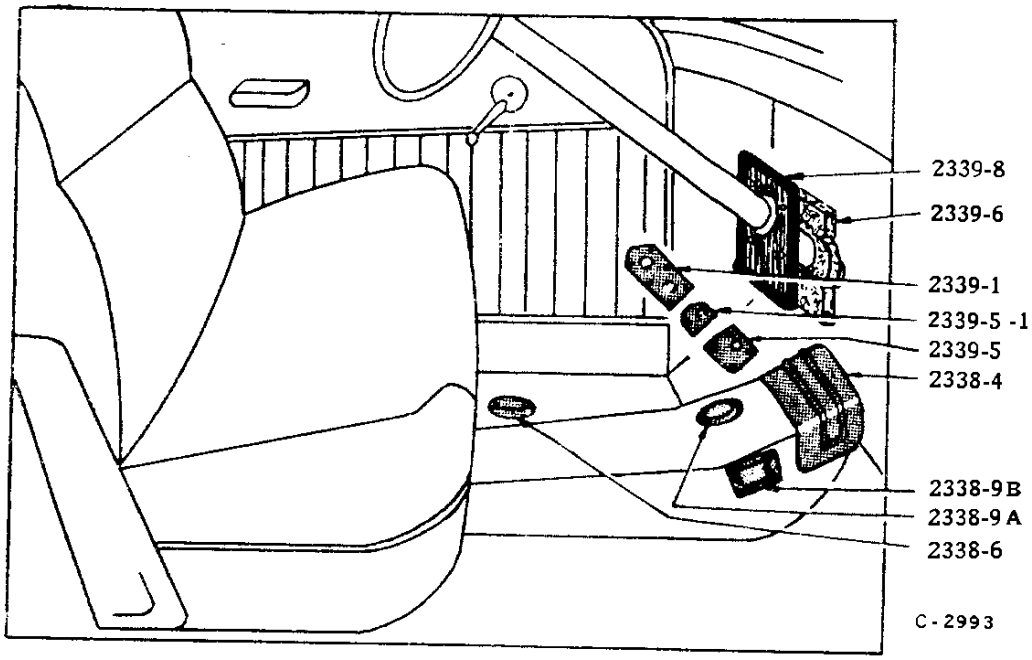

2338-4	297386	1	COVER, clutch housing bolt hole	
	- - - -	9	SCREW, to pan No. 8 x 1/2"	
2338-6	284299	1	COVER, brake cylinder hole	
	1458x2	2	FASTENER, to floor pan	
2338-9A	NOT 56J			
2338-9B	1314460	1	GASKET, hole cover	
	g161895	4	SCREW, hole cover No. 10 - 12 x 1/2"	
	1578x6	4	SPEED NUT No. 10	
			The following covers are rubber and steel (with AD.) (illust. plate 23-2)	
2338-9-1	292050x7	1	COVER, floor pan oil inspection hole	Black
2338-9-1	292050x31	1	COVER, floor pan oil inspection hole	Dark Blue
2338-9-1	292050x32	1	COVER, floor pan oil inspection hole	Dark Green
2338-9-1	292050x33	1	COVER, floor pan oil inspection hole	Rose Mist
	- - - -	2	SCREW, to pan No. 10 - 24 x 1"	
	1578x7	2	SPEED NUT No. 10 - 24	

ILLUST. NUMBER	PART NUMBER	PER CAR	DESCRIPTION

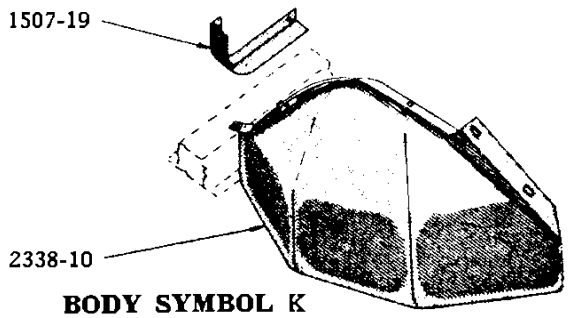

BODY SYMBOL K

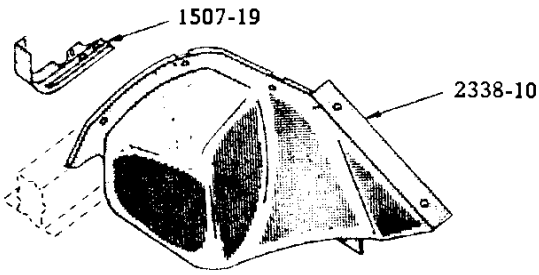

BODY SYMBOL J

C-2994

PEDAL PROTECTOR AND INNER SPLASH SHIELD

2338-10	303056p	1	SHIELD, pedal protector - K - LHC
	1906x16	5	SCREW, to No. 1 hold down bracket and cowl - 1/4" - 20 x 3/4"
	1578x10	5	SPEED NUT 1/4" - 20
(1507-19)	- - - -	1	SHIELD, frame brake pedal splash - see Group 1507 (Plate 15-2)

2339 - TOE BOARD (illust. Group 2338)

2339-1	298124p	1	COVER, brake and clutch pedal hole (less power brakes) - K
2339-1	309164p	1	COVER, brake and clutch pedal hole (with power brakes) - K
	- - - -	6	SCREW, to floor pan No. 10 x 1/2"
2339-5	298125	1	SEAL, brake pedal hole - rubber (less power brakes) - K
2339-5	309165	1	SEAL, brake pedal hole - rubber (with power brakes) - K
2339-5-1	298129	1	SEAL, clutch pedal hole (less AD)
2339-5-1	309166	1	SEAL, clutch pedal hole (with AD)
2339-6	310146	1	GROMMET, steer. post dash (less power steer.) - LHC
2339-6	310147	1	GROMMET, steer. post dash (with power steer.) - LHC
2339-8	306910x1	1	COLLAR, steer. post (less power steer.) LHC
2339-8	306912x1	1	COLLAR, steer. post (with power steer.) LHC
	- - - -	4	SCREW, to dash No. 10 x 2-1/4"

2341 - RUBBER FLOOR MATS AND CARPETS (Plate 23-2)

2341A - Floor Mats

2341-9	299756x1	1	MAT, trunk floor - K7	White, Brown, Gray

2341B - Front Floor Carpets

When installing front floor carpets on model 56J cars less AD. the clutch pedal hole must be cut. The brake pedal hole must also be cut. The upper lanced hole is for standard brakes and the lower one for power brakes.

2341-3	1316492x30	1	CARPET, front floor	Charcoal Black
2341-3	1316492x31	1	CARPET, front floor	Light Blue
2341-3	1316492x32	1	CARPET, front floor	Dark Green
2341-3	1316492x33	1	CARPET, front floor	Dark Rose Mist

ILLUST. NUMBER	PART NUMBER	PER CAR	DESCRIPTION	
			2341C - Rear Floor Carpet	
2341-9	1316498x30	1	CARPET, rear floor	Charcoal Black
2341-9	1316498x31	1	CARPET, rear floor	Light Blue
2341-9	1316498x32	1	CARPET, rear floor	Dark Green
2341-9	1316498x33	1	CARPET, rear floor	Dark Rose Mist
2344 - SUN SHIELD OR VISOR (Plate 23-2)				
			Sun Shield Includes Bracket (Bracket is chrome)	
2344-2	299088x16	1	SUN SHIELD, right	Off White
	299089x16	1	SUN SHIELD, left	Off White
2344-2	299088x17	1	SUN SHIELD, right	Light Rose Mist
	299089x17	1	SUN SHIELD, left	Light Rose Mist
2344-2	299088x18	1	SUN SHIELD, right	Light Blue
	299089x18	1	SUN SHIELD, left	Light Blue
2344-2	299088x19	1	SUN SHIELD, right	Light Green
	299089x19	1	SUN SHIELD, left	Light Green
2344-2	299088x20	1	SUN SHIELD, right	Charcoal
	299089x20	1	SUN SHIELD, left	Charcoal
			The following safety padded sun shields are special equipment (Bracket is chrome)	
	1313990x4	1	SUN SHIELD, right	Off White
	1313991x4	1	SUN SHIELD, left	Off White
			(Safety visor has vinyl cover, but no binding.)	
	1313990x2	1	SUN SHIELD, right	Light Blue
	1313991x2	1	SUN SHIELD, left	Light Blue
			(Safety visor has vinyl cover, but no binding.)	
	1313990x3	1	SUN SHIELD, right	Light Green
	1313991x3	1	SUN SHIELD, left	Light Green
			(Safety visor has vinyl cover, but no binding.)	
	1313990x5	1	SUN SHIELD, right	Light Rose Mist
	1313991x5	1	SUN SHIELD, left	Light Rose Mist
	1313990x6	1	SUN SHIELD, right	Charcoal Black
	1313991x6	1	SUN SHIELD, left	Charcoal Black

ILLUST. NUMBER	PART NUMBER	PER CAR	DESCRIPTION

2345 - REAR VIEW MIRROR

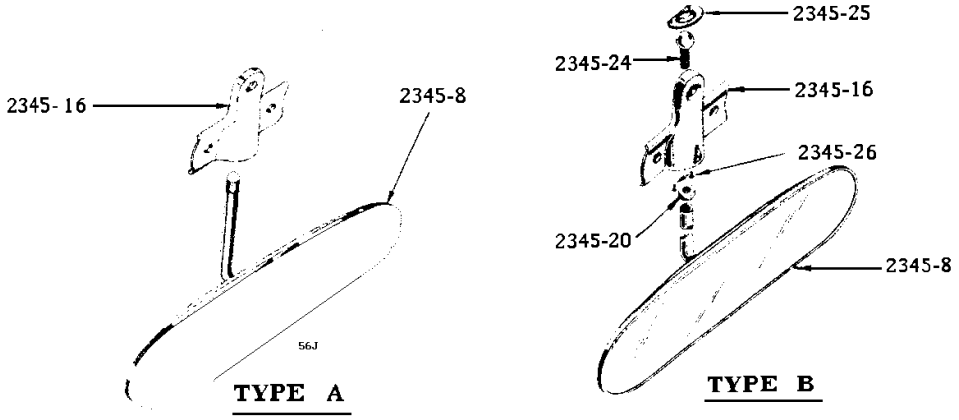

				Type	
	- - - -	1	MIRROR, accessory - see Group AC45		
2345-8	298656x15	1	MIRROR and ARM - K7	A	Chrome
2345-16	303589w	1	BRACKET, mirror - K7	A	Chrome
2345-16	303589p	1	BRACKET, mirror - K7	A	Prime
	- - - -	3	SCREW, to windshield header bar No. 10 - 24 x 3/4"		
	299198w	1	NUT, check, to ball stud arm 5/16" - 24		
2345-20	g120368	1	NUT, hex. 5/16" - 24		
	g138485	1	WASHER, lock 5/16"		

* - Use as required
▲ - Not available

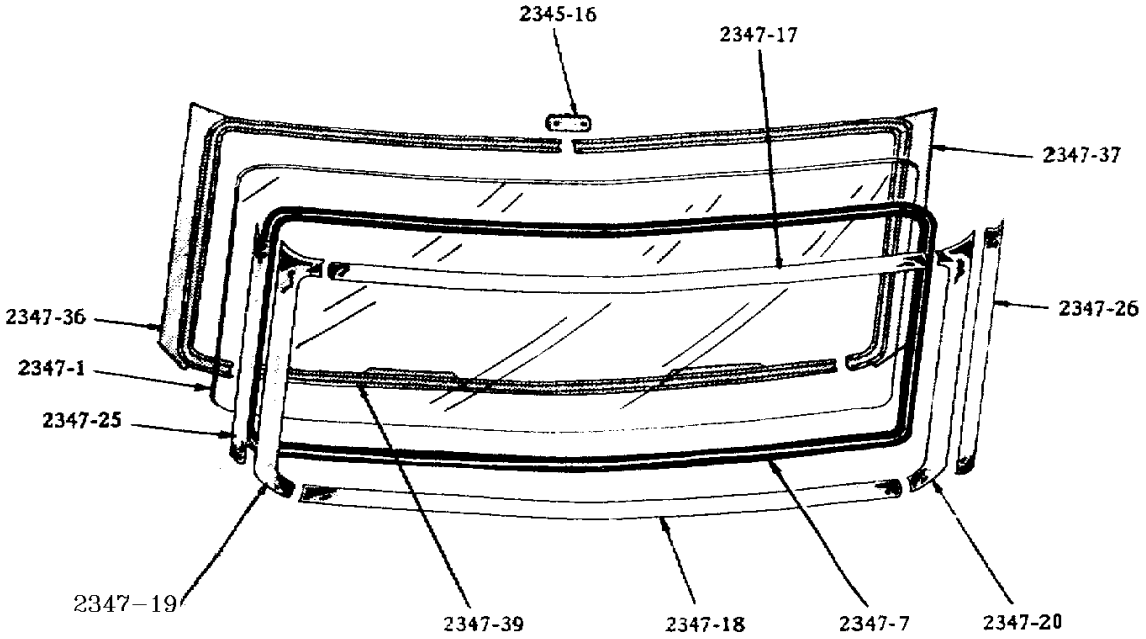

2347 - WINDSHIELD AND MOULDINGS (Plate 23-35)

2347A - Windshield Glass, Channels and Reveal Mouldings

2347-1	303151	1	GLASS, windshield - K - U.S.A.
2347-1	303152	1	GLASS, windshield (colored) - K - U.S.A.
2347-7	1942x1	1	CHANNEL, glass - rubber - K - U.S.A.
2347-17	303591	1	MOULDING, upper, reveal - K
2347-18	303527	1	MOULDING, lower, reveal - K
2347-19	303532	1	MOULDING, right side, reveal - K
2347-20	303533	1	MOULDING, left side, reveal - K
2347-25	299744	1	MOULDING, right, side extension - K
2347-26	299745	1	MOULDING, left, side extension - K
	- - - -	4	SCREW, to body No. 6 x 3/8"

2347B - Windshield Opening Garnish Mouldings

(NOTE: The manual states that stainless steel mouldings were used before approx. 4925 cars, and painted mouldings were used after approx. 4925 cars, but only 4071 (4073?) 56J cars were built. Perhaps the total includes 1956 Sky Hawks)

2347-36	1313262	1	MOULDING, right	Stainless Steel
2347-37	1313263	1	MOULDING, left	Stainless Steel
			(used before approx 4925 cars)	
2347-36	1316126p	1	MOULDING, right	Painted
2347-37	1316127p	1	MOULDING, left	Painted
			(used after approx. 4925 cars)	
	- - - -	*	SCREW, to body No. 6 x 1"	
	1526x35w	2	SCREW, to body No. 6 x 2"	

ILLUST. NUMBER	PART NUMBER	PER CAR	DESCRIPTION
2347-39	310673	1	MOULDING, lower - K7 Stainless Steel (used before approx 4925 cars)
2347-39	1312382p	1	MOULDING, lower - K7 Painted (used after approx 4925 cars)
	- - - -	6	SCREW, to body No. 6 x 1"

* - Use as required
▲ - Not available

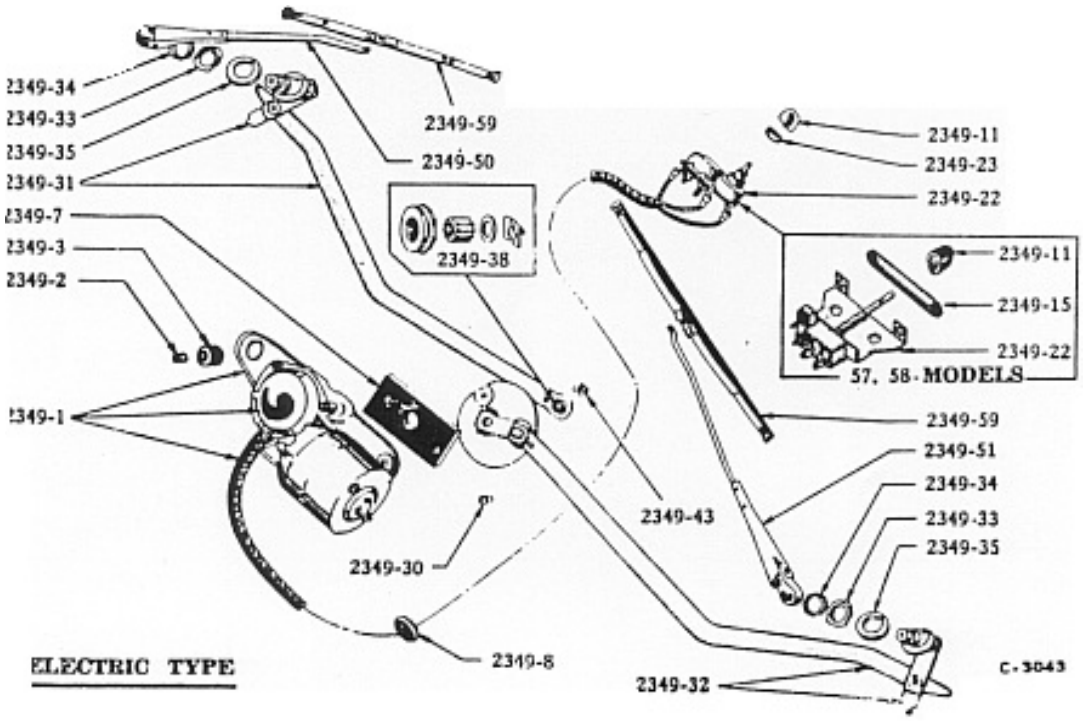

TYPICAL WINDSHIELD WIPER

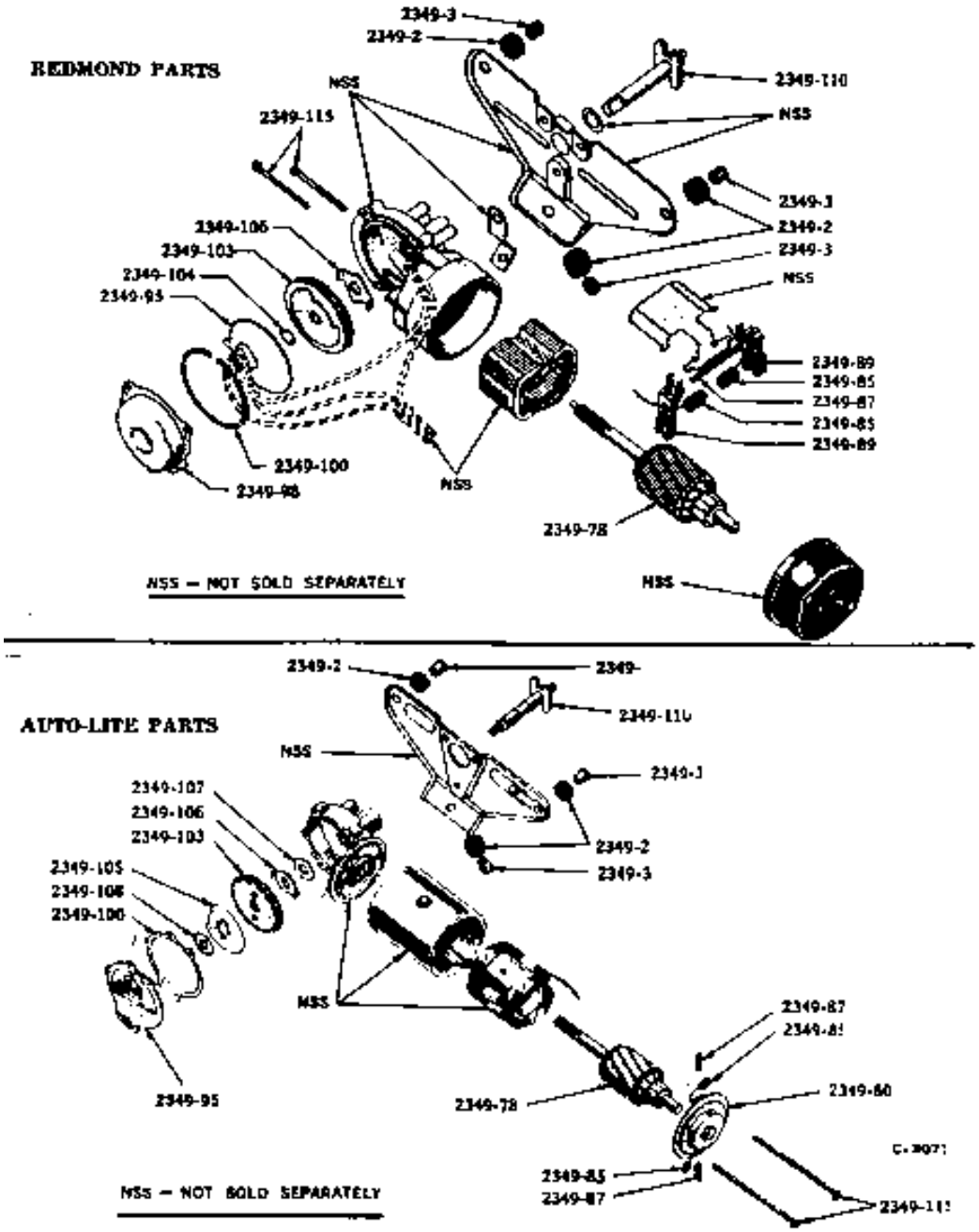

ELECTRIC WINDSHIELD WIPER MOTOR

ILLUST. NUMBER	PART NUMBER	PER CAR	DESCRIPTION
2349 - WINDSHIELD WIPER (Plates 23-36, 37)			
			2349B - Electric Type
2349-1	1312320	1	MOTOR and BRACKET, w/s wiper
2349-2	293668	3	CUSHION, bracket mounting - rubber (used with Redmond and American Bosch motors)
2349-2	311082	3	GROMMET, bracket mounting - rubber (Used with electric Auto-lite motor)
2349-3	293669	3	SPACER, bracket mounting cushion (used with Redmond and American Bosch motors)
2349-3	311083	3	EYELET, bracket mounting (Used with electric Auto-lite motor)
2349-7	293749	1	GASKET, bracket to cowl - rubber
	- - - -	3	BOLT, to cowl No. 10 - 32 x 3/8"
	- - - -	3	NUT and WASHER, hex. No. 10 - 32
	- - - -	2	WASHER, plain No. 10
2349-8	293762	1	GROMMET, cable dash - rubber
2349-11	NOT 56J		
2349-15	NOT 56J		
2349-22	1540137	1	SWITCH less CIRCUIT BREAKER, wiper
2349-23	536350w	1	NUT, to board 9/16" - 28
	1540288	1	CIRCUIT BREAKER, wiper switch
2349-30	261419	1	PLUG, vacuum wiper control cable dash hole - rubber
2349-31	303840	1	DRIVER and CONNECTING ARM, right
2349-32	303925	1	DRIVER and CONNECTING ARM, left
2349-33	298301w	2	SPACER, driver to shroud
2349-34	287693w	2	NUT, driver to shroud 5/8" - 24
2349-35	298300	2	GASKET, driver to shroud - leather
2349-43	293663	1	CLIP, arm to wiper
	g120367	1	NUT, left arm to motor 1/4" - 28
	g121753	1	WASHER, shakeproof 1/4"
2349-38	310568	1	KIT, connecting arm bushing and grommet - consists of:
			1 - - - - Bushing, connecting arm
			1 - - - - Grommet, connecting arm
			1 293663 Clip, connecting arm
			1 - - - - Washer, plain 7/32"I.D. x 7/16"O.D.
2349-50	1314802	1	ARM and SPRING, right wiper
2349-51	1314803	1	ARM and SPRING, left wiper
2349-59	1314810	2	BLADE, wiper 12" long
			2349C - Electric Motor Parts
			Before ordering motor parts check vendors name on motor. Parts listed in this group for use with American Bosch motors are marked "#". Those not marked are for Redmond motors.
	- - - -	1	MOTOR, w/s wiper - see MOTOR and BRACKET - Group 2349B
2349-78	1314983	1	#ARMATURE, w/s wiper motor
2349-85	307541	2	#BRUSH, w/s wiper motor
2349-87	NOT 56J		
2349-89	NOT 56J		
2349-95	1314984	1	#SWITCH, w/s wiper motor
2349-98	NOT 56J		
2349-100	NOT 56J		
2349-103	NOT 56J		
2349-104	NOT 56J		
2349-106	NOT 56J		
2349-110	NOT 56J		
2349-115	NOT 56J		

ILLUST. NUMBER	PART NUMBER	PER CAR	DESCRIPTION
			The following parts are for electric Auto-Lite motors
2349-78	1312210	1	ARMATURE, w/s wiper motor
2349-80	1312838	1	HEAD, commutator end (includes brushes)
2349-85	1312471	2	BRUSH, w/s wiper motor
2349-87	311079	2	SPRING, w/s wiper motor brush
2349-95	1312459	1	SWITCH, w/s wiper motor parking
2349-100	311088	1	GASKET, parking switch
2349-103	311089	1	GEAR, w/s wiper motor driven
2349-105	1312384	1	PLATE, w/s wiper motor gear cam
2349-106	311077	1	KEY, driven gear
2349-107	311081	1	THRUST WASHER, gear shaft inner 25/64"I.D. x 3/4" O.D.
2349-108	311080	1	THRUST WASHER, gear shaft outer 25/64"I.D. x 9/16" O.D.
2349-110	311075	1	SHAFT, w/s wiper motor output
2349-115	311441	1	BOLT, w/s wiper motor case thru

2351 - DOME AND COURTESY LAMPS (NOT SHOWN)

			Dome Lamps
	1312917x2	1	LAMP COMPLETE, dome
	298248	1	BODY COMPLETE, dome lamp (incl. switch)
	g161373	4	SCREW, to roof bracket No. 6 x 1/2"
	1312918x2	1	DOOR and LENS, dome lamp
	g455136	1	BULB, dome lamp (Mazda No. 1004)
			Dome and Courtesy Lamp Switches
	285641	2	SWITCH, automatic courtesy lamp (on front hinge pillar)
	g161857	4	SCREW, to hinge pillar No. 8 x 3/8"

* - Use as required ▲ - Not available

BODY PANELS - Body Symbol K

From page 368 - Body Parts Manual

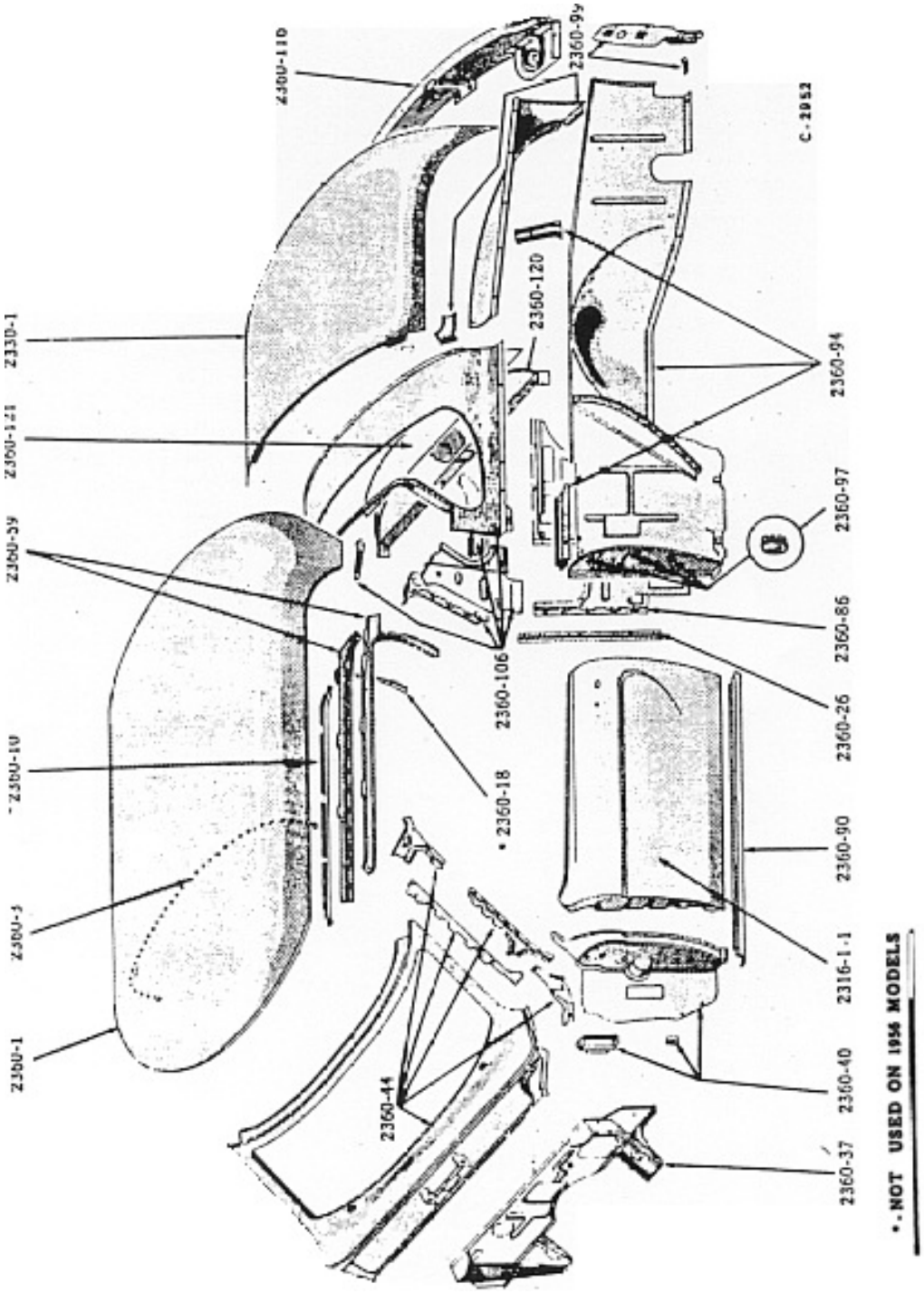

ILLUST. NUMBER	PART NUMBER	PER CAR	DESCRIPTION

2360 - BODY PANELS (Plate 23-38)

All body panels are furnished in prime.

2360A - Roof Panels, Bows and Retainers

2360-1	304656	1	ROOF PANEL ASSY. - K Consists of: Roof and Insulator
	- - - -	10	SCREW, to headlining retainer No. 10 x 3/4"
2360-3	1313284	1	BOW, front, hardboard headlining
	1313284	1	BOW, center, hardboard headlining
	1313285	1	BOW, rear, hardboard headlining
	- - - -	4	SCREW, to headlining retainer No. 8 - 15 x 3/4"
	- - - -	2	SCREW, to headlining retainer No. 6 - 18 x 7/8"
2360-10	NOT 56J		
2360-18	NOT 56J		
2360-26	- - - -	1	RETAINER, right lock pillar trim - K (See Group 2323)
	- - - -	1	RETAINER, left lock pillar trim - K (See Group 2323)
(NOTE: The following items were not listed in the original manuals)			
	1313425X1	1	HEADLINER BOARD, front, White
	1313426X1	1	HEADLINER BOARD, second panel, White
	1313427X1	1	HEADLINER BOARD, third panel, White
	1313428X1	1	HEADLINER BOARD, rear, White
	1313425X2	1	HEADLINER BOARD, front, Blue
	1313426X2	1	HEADLINER BOARD, second panel, Blue
	1313427X2	1	HEADLINER BOARD, third panel, Blue
	1313428X2	1	HEADLINER BOARD, rear, Blue
	1313425X3	1	HEADLINER BOARD, front, Green
	1313426X3	1	HEADLINER BOARD, second panel, Green
	1313427X3	1	HEADLINER BOARD, third panel, Green
	1313428X3	1	HEADLINER BOARD, rear, Green
	1313425X4	1	HEADLINER BOARD, front, Light Rose
	1313426X4	1	HEADLINER BOARD, second panel, Light Rose
	1313427X4	1	HEADLINER BOARD, third panel, Light Rose
	1313428X4	1	HEADLINER BOARD, rear, Light Rose
	1313425X5	1	HEADLINER BOARD, front, Charcoal
	1313426X5	1	HEADLINER BOARD, second panel, Charcoal
	1313427X5	1	HEADLINER BOARD, third panel, Charcoal
	1313428X5	1	HEADLINER BOARD, rear, Charcoal

2360B - Dash and Cowl Side Panels

2360-37	1312187	1	PANEL, dash - K
2360-40	304664	1	PANEL KIT, right, cowl side - K - LHC consists of:
			1 - - - - Panel, cowl side
			1 - - - - Flange, vent open.
			1 - - - - Bracket, hood hinge spring
	304665	1	PANEL KIT, left, cowl side - K - LHC consists of:
			1 - - - - Panel, cowl side
			1 - - - - Flange, vent open.
			1 - - - - Bracket, hood hinge spring

ILLUST. NUMBER	PART NUMBER	PER CAR	DESCRIPTION
			2360C - Cowl Top and Windshield Opening Panels
2360-44	1312478	1	PANEL KIT, cowl top and w/s opening - K - consists of:
			1 - - - - Panel, cowl top and w/s open.
			2 - - - - Reinforcements, w/s header to roof rail corner R.H. and L.H.
			2 - - - - Reinforcements, hinge pillar R.H and L.H.
			2 - - - - Pillars, front hinge R.H. and L.H.
			2 - - - - Braces, cowl side to pillar R.H. and L.H.
			2360D - Roof Rails and Drip Mouldings
2360-59	304682	1	ROOF RAIL and DRIP MOULDING KIT, right - K
	304683	1	ROOF RAIL and DRIP MOULDING KIT, left - K
			The above Roof Rail and Drip Moulding Kits consist of:
			1 - - - - Roof rail and drip moulding assy.
			1 - - - - Reinforcement, door open. roof rail
			1 - - - - Dome lamp bracket (used on left rail only)
			2360E - Rear Quarter Panels
2360-86	1314442	1	PANEL, lower right, inner r/q
	1314443	1	PANEL, lower left, inner r/q
			2360F - Sill Panels
2360-90	302910	1	PANEL, right sill - K
	302911	1	PANEL, left sill - K
			2360G - Wheelhouse and Deck Side Panels
2360-94	1312708	1	PANEL KIT, right, wheelhouse - K - consists of:
			1 - - - - Panel, wheelhouse
			1 - - - - Brace, deck open. to wheelhouse
			1 - - - - Extension, deck open. upper panel
			1 - - - - Splashshield, wheelhouse panel
			10 - - - - Speed nuts
2360-94	1312709	1	PANEL KIT, left, wheelhouse - K - consists of:
			1 - - - - Panel, wheelhouse
			1 - - - - Brace, deck open. to wheelhouse
			1 - - - - Extension, deck open. upper panel
			1 - - - - Splashshield, wheelhouse panel
			10 - - - - Speed nuts
2360-97	g125619	6	PLUG, fender bolt hole 1-1/2" (located in lock pillar) - K
2360-99	304666	1	PANEL KIT, right, deck open. side - K - consists of:
			1 - - - - Panel, deck open. side
			1 - - - - Reinforcement, rear corner
			1 - - - - Reinforcement, upper corner
			1 - - - - Plate, lamp mounting
	304667	1	PANEL KIT, left, deck open. side - K - consists of:
			1 - - - - Panel, deck open. side
			1 - - - - Reinforcement, rear corner
			1 - - - - Reinforcement, upper corner
			1 - - - - Plate, lamp mounting
			2360H - Deck Opening Panels
2360-106	304684	1	PANEL KIT, upper, deck open. - K - consists of:
			1 - - - - Panels, deck open.
			2 - - - - Panels, r/q upper inner R.H. & L.H.

ILLUST. NUMBER	PART NUMBER	PER CAR	DESCRIPTION
			2 - - - - Panels, r/q upper R.H. & L.H.
			2 - - - - Extensions, reinforcement R.H. & L.H.
			2 - - - - Supports, headlining listing bow
2360-116	308128	1	PANEL ASSY., lower deck open. - K
			2360J - Rear Seat Back Shelf
2360-120	303757	1	SHELF, rear seat back
			Type Cover **Color**
2360-121	1313419x1	1	COVER, shelf plain Black
2360-121	1313419x2	1	COVER, shelf plain Dark Blue
2360-121	1313419x3	1	COVER, shelf plain Dark Green
2360-121	1313419x4	1	COVER, shelf plain Dark Rose Mist
2360-121	1313419x5	1	COVER, shelf plain Dark Olive Green
2360-121	1313419x6	1	COVER, shelf plain Romany Red
2360-121	1313419x7	1	COVER, shelf plain Gold
2360-121	1313419x8	1	COVER, shelf plain Tangerine
	306331x1	4	FASTENER, to shelf

BUL. NUM	PAGE	SUBJECT
310	1	WAX MAY DULL NEW CAR FINISH - 1956 MODEL PASSENGER CARS
310	1	TIRE PRESSURE IMPORTANT FOR SAFE DRIVING
310	2	PAINT FORMULAS FOR 1956 MODEL PASSENGER CARS AND STATION WAGONS
310	4	DOME LIGHT DOOR AND LENS REMOVAL - 1956 HAWK SERIES MODELS
312	1	DIVIDED FRONT SEAT LEAN BACK ALIGNMENT - 1956 MODELS
312	4	CONTROL ARM BUSHING RETAINERS - ALL MODELS
312	4	INSTRUMENT BOARD AND INSTRUMENT GROUNDING - 1956 HAWK SERIES
313	1	HOOD PROP HOLE - 1956 HAWK SERIES CARS
313	1	HIGH ALTITUDE METERING RODS FOR 56J (CARTER WCFB-2394S CARBURETOR)
313	1	OVERDRIVE TRANSMISSION REMOVAL - 56J MODELS
313	1	PAINT FORMULATIONS FOR 1956 PASSENGER CAR AND STATION WAGON COLORS - CAMBRIDGE GRAY
313	1	ROSS STEERING GEAR LUBRICANT - ALL MODELS
313	2	HEAD LAMP RIVETS LOOSE - PASSENGER CARS
313	2	ULTRAMATIC TRANSMISSION THROTTLE LINKAGE ADJUSTMENT - 56J
313	2	TORQUE CONVERTERS - EXCHANGE PRICE LIST
XXX		*(SERVICE LETTER 936 DATED 5-22-56)* ENGINE OIL PUMP RELIEF VALVE TUBE KIT FOR CORRECTION OF HYDRAULIC VALVE TAPPET LETDOWN - 56J GOLDENHAWK *[sic]*.
314	1	ENGINE NOISE - 56J (GOLDEN HAWK)
314	2	HEADLINING PULLING AWAY FROM REAR QUARTER WINDOW MOULDINGS - 5-PASSENGER COUPE AND 2-DOOR SEDAN - 1956 MODELS
314	2	SEAT CUSHION HACK SPRING LUBRICATION
314	2	RADIO SERVICE - 1956 PASSENGER CARS AND TRUCKS
314	3	NOISE IN POWER STEERING GEAR - 1956 MODELS
314	3	INTERFERENCE BETWEEN BODY BOLT AND FRONT OF REAR SPRING - 1956 MODEL PASSENGER CARS
314	4	LOW RANGE BRAKE INFORMATION - ULTRAMATIC
314	4	FRONT PUMP RESTRICTION - ULTRAMATIC TRANSMISSION - 56J MODEL
314	5	SAFETY LATCH AND HOOD LOCK - 1956 HAWK SERIES
315	1	ENGINE MISS OR SKIP - 56J MODELS
315	2	HYDRAULIC VALVE LIFTER CHECKING TOOL - GOLDEN HAWK MODELS
315	3	CHAMPION NO. N-8-64B SPARK PLUG
315	3	SHIFT SPEEDS - ULTRAMATIC TRANSMISSION
315	4	LOW SPEED GOVERNOR - ULTRAMATIC TRANSMISSION
315	4	ULTRAMATIC TRANSMISSION CHANGE
315	4	GASOLINE TANK ATTACHMENT - 1956 PASSENGER CARS
315	5	REPAIR OF FIBERGLASS *[sic]* REINFORCED PLASTIC REAR FENDER FINS - STATION AND GOLDEN HAWK MODELS
315	7	POWER STEERING GEAR AND PUMP CHANGES
315	8	LIGHT BULB MAZDA NO. 53
316	1	ENGINE DETONATION - GOLDEN HAWK 56J MODELS
316	2	BACKFIRING - 4BBL CARB.
316	2	FAN BLADE ASSEMBLY - CRACKS AND BREAKAGE - 56J MODELS
316	2	MOISTURE IN DISTRIBUTOR CAP - ENGINE FAILS TO START - 56J MODELS
316	5	CHANGES IN FRONT PUMP AND RELATED PARTS - ULTRAMATIC TRANSMISSION
316	5	DOW CORNING 4 SILICONE COMPOUND FOR BODY NOISES AND SQUEAKS
317	1	TRUNK LOCK AND GLOVE COMPARTMENT LOCK KIT - 1956 C and K MODELS
317	2	ENGINE NUMBERS AND IDENTIFICATION - 56J MODEL
317	2	STARTER MOTOR PINION ADJUSTMENT - 56J MODELS
317	2	INTAKE VALVE SPRING RETAINERS - 56J MODELS
317	3	ENGINE STALLING ON LEFT TURNS - 4 - BARREL CARBURETOR 1955 - 1956 MODELS WITH 259, 289, 352 CU. IN. ENGINES
317	3	POWER STEERING GEAR NOISE AND ADJUSTMENTS - 1956 MODELS
317	4	WHEEL AND TIRE RUNOUT - ALL MODELS
317	4	HOW LOCAL CONDITIONS AFFECT RADIO RECEPTION
319	5	CARBURETOR AIR CHAMBER - VENT VALVES NOISY.
319	5	OIL LOSS - 56J ULTRAMATIC TRANSMISSION

SERVICE BULLETINS/SERVICE LETTERS

BUL. NUM	PAGE	SUBJECT
322	1	POWER BRAKE UNIT NOISE - 1956 - 1957 STUDEBAKER AND 1957 PACKARD CLIPPER
322	2	OPERATION ADDITION - 1953 - 1957 STUDEBAKER SERVICE OPERATION TIME GUIDE
323	2	INSTALLATION OF BATTERIES
325	1	VALVE SPRING RETAINERS - 55th and 56th SERIES PACKARD and 1956 STUDEBAKER GOLDEN HAWK ENGINES
327	4	PASSENGER CAR FRONT FENDER FOR SERVICE - 1953 TO 1957 STUDEBAKER AND 1957 PACKARD CLIPPER MODELS
327	3	HOOD REPLACEMENT - 1956 - 1956 STUDEBAKER AND 1957 PACKARD CLIPPER-SEDANS AND STATION WAGONS
327	2	REAR AXLE SHAFT BEARING LUBRICATION - STUDEBAKER AND PACKARD CLIPPER MODELS
327	8	HIGH RANGE CLUTCH BURNING - ULTRAMATIC TRANSMISSION
328	5	IGNITION AND STARTING SWITCH - 1955 - 1957 MODEL STUDEBAKER CARS AND TRUCKS
331	1	INSTALLATION OF NEW FLANGE ON POWER STEERING GEAR SHAFT - 1955 -1957 STUDEBAKER AND 1957 - 1958 PACKARD MODELS
331	4	ULTRAMATIC CONVERTER PUMP SHAFT AND OIL PUMP ROTOR
331	6	TORQUE CONVERTER - 1956 PACKARD AND CLIPPER, 1956 STUDEBAKER GOLDEN HAWK MODELS
333	3	HEAVY DUTY BRAKES - BONDED LINING - PASSENGER CARS WITH 10" AND 11" BRAKE DRUMS
335	1	FIBERGLASS REPAIR KIT
335	6	FRAME SUBSTITUTIONS - STUDEBAKER 1955 - 1956 MODELS
335	7	FLYWHEEL SCREW -- PACKARD ULTRAMATIC TRANSMISSION
336	4	STEERING POST FLANGE PIN - 1955-57 STUDEBAKER AND 1957-58 PACKARD WITH POWER STEERING
337	3	HESITATION ON ACCELERATION WITH COLD ENGINE -- MODELS WITH 4 BBL. CARBURETOR
338	3	HIGH RANGE CLUTCH BURNING - ULTRAMATIC TRANSMISSION
338	4	ULTRAMATIC DRIVE CONTROL PART NO. 423800, PRIOR TO GEAR START
339	1	WINDSHIELD WASHER NOZZLE - AC KIT NO. 2774 AND NO. 2911
339	3	OIL LOSS AT BREATHER - ULTRAMATIC
339	4	TORQUE CONVERTERS - 1956 PACKARD AND 1956 STUDEBAKER GOLDEN HAWK MODELS
339	5	FLUID TEMPERATURE AFFECTS ULTRAMATIC UPSHIFT
340	1	SPEEDOMETER CORRECTIVE SERVICE
340	2	NOISY WATER PUMPS - 1955-56 PACKARD AND 56J STUDEBAKER GOLDEN HAWK
340	7	ULTRAMATIC THROTTLE CONTROL ROD ADJUSTMENT - ALL MODELS
340	7	ULTRAMATIC THROTTLE LINKAGE ADJUSTMENTS - GEAR START TYPE
344	2	HIGH RANGE DRIVING CLUTCH PLATE - ULTRAMATIC, 1955-56 PACKARD AND 56J GOLDEN HAWK
344	2	HYDRAULIC VALVE LIFTERS - 1955-56 PACKARD AND 56J GOLDEN HAWK
346	4	HIGH RANGE CLUTCH HOUSING, PART NOS. 458950 AND 6484046 - ULTRAMATIC TRANSMISSION
346	4	HIGH RANGE CLUTCH HOUSING IDENTIFICATION - ULTRAMATIC TRANSMISSION - 1955-56 PACKARD AND 56J STUDEBAKER
348	3	CONVERTER REACTION CLUTCH SPRAGS - ULTRAMATIC TRANSMISSION - 1955-56 PACKARD, 56J GOLDEN HAWK AND 1954 PACKARD GEAR START
350	1	REAR AXLE PINION SEAL LEAKS - ALL MODELS
350	1	ULTRAMATIC CONVERTER FLUID LEAKS - STUDEBAKER 56J AND PACKARD 1950-56 MODELS

SERVICE BULLETINS/SERVICE LETTERS

BUL. NUM	PAGE	SUBJECT
351	4	BELL HOUSING OIL SEAL - ULTRAMATIC TRANSMISSION
355	1	SPARK PLUGS-1955-1956 PACKARD VB AND STUDEBAKER 56J
355	6	ULTRAMATIC SERVICE BUSHINGS AND BEARINGS
358	6	ULTRAMATIC CONVERTER DIRECT DRIVE CLUTCH PISTON RING INSTALLATION - 1955-56 PACKARD - 56J GOLDEN HAWK
358	7	CONVERTER REACTION CLUTCH SPRAGS - ULTRAMATIC TRANSMISSION - 1955-56 PACKARD - 56J GOLDEN HAWK AND 1954 PACKARD GEAR START
359	6	ULTRAMATIC HIGH RANGE CLUTCH HOUSING - PART NOS. 458950 AND 6484046 - 1955-56 PACKARD AND 56J GOLDEN HAWK

UTILITY ITEMS

Note: Items marked with an asterisk (*), had more than one description listed in the original catalogs

g100027 SCREW 3/8" - 24 x 1-1/4"
g100109 SCREW 1/4" - 20 x 3/4"
g100123 SCREW 3/8" - 16 x 3/4"
g100128 SCREW 5/16" - 18 x 3"
g100133 SCREW 3/8" - 16 x 3/4"
g100134 SCREW 3/8" - 16 x 1"
g102647 NUT 1/2" - 20
g102695 SET SCREW No. 10 - 24 x 3/8"
g103024 NUT, hex. 1/4" - 28
g103025 NUT, hex. 5/16" - 24
g103026 NUT, hex. 3/8" - 24
g103127 WING NUT 1/4" - 20
g103335 WASHER lock 3/4"
g103565 PIN locating 1-1/4" long
g103869 PLUG, square head 3/4" pipe
g103876 PLUG 1"
g103877 PLUG 1/8"
g103878 PLUG, pipe 1/4"
g103879 PLUG, pipe 3/8"
g103880 PLUG 1/2" pipe
g103883 GREASE PLUG 1/8" pipe
g103897 Plug 1-3/4"
g103905 KEY, woodruff 1/8" x 5/8"

g103905* KEY, woodruff 1/8" x 11/16"
g103905* KEY, woodruff 1/8" x 5/8"

g103907 KEY, woodruff No. 11
g106324 SCREW 5/16" - 18 x 5/8"
g106326 SCREW 5/16" - 18 x 1 1/8"
g106331 SCREW 3/8" - 16 x 1-1/8"
g106340 SCREW 1/2" - 13 x 7/8"
g106497 WASHER, lock No. 10
g106517 PLUG 1-1/8"
g107828 PAL NUT, locking 3/8" - 24
g107829 NUT, lock hex. 3/4" - 16"
g110486 SCREW No. 10 - 24 x 3/8"
g110488 SCREW, No. 10 - 24 x 5/8"
g110490 SCREW, No. 10 - 24 x 7/8"
g110730 WASHER, lock 3/8"
g110741 PIN, 1/8" x 11/16"
g111603 CLAMP, hose 11/16"
g111606 CLAMP, hose 15/16"
g111618 CLAMP, hose 1-13/16"
g111620 CLAMP, hose 1-15/16"
g111622 CLAMP, hose 2-1/8"
g111623 CLAMP, hose 2-3/16"
g111627 CLAMP, hose 2-5/8"
g111633 SCREW, hose to tube No. 8 x 1/2"
g112752 SCREW, 5/16" - 24 x 3-3/8"
g114496 NUT, lock 1/2" - 20
g114605* WASHER, sh'prf. 5/16"
g114605* WASHER, lock 5/16"

g114608* WASHER, lock 1/2"
g114608* WASHER, sh'prf. 1/2"

g115308 WASHER, plain 5/16"
g115548 WASHER, lock 5/16"
g116341 ELBOW, oil cooler inlet pipe to radiator
g117278 SCREW, No. 10 - 24 x 2-1/2"
g119256 NUT, 5/8" - 18
g120151 FUSE, 15 amp.

g120214* WASHER, lock 5/16"
g120214* WASHER, plain 5/16"

g120217 WASHER, lock No. 10
g120228 SCREW, 5/16" - 18 x 5/8"
g120248 SCREW, 3/8" x 1-1/4"
g120361 NUT, hex. No. 10 - 24
g120367 NUT, hex. 1/4" - 28
g120368 NUT, hex. 5/16" - 24
g120369 NUT, hex. 3/8" - 24
g120371 NUT, hex. 1/2" - 20
g120375 NUT, hex. 3/8" - 24
g120376 NUT, hex. 5/16" - 18
g120377 NUT, hex. 3/8" - 16

g120380* WASHER, sh'prf. 1/4"
g120380* WASHER, lock 1/4"

g120382 WASHER, lock 3/8"
g120383 WASHER, lock 7/16"
g120386 WASHER, plain 5/16"

g120391* WASHER, plain 7/32"
g120391* WASHER, plain No. 10

g120392* WASHER, plain 9/32"
g120392* WASHER, plain 1/4"

g120393* WASHER, plain 5/16"
g120393* WASHER, plain 11/32"

g120394* WASHER, plain 3/8"
g120394* WASHER, plain 11/32"

g120395* WASHER, plain 7/16"
g120395* SPACER, 1/16" thick

g120396 WASHER, plain
g120613 NUT, locking 1/4" - 28
g120614 NUT, hex. No. 10 - 32
g120622 NUT, terminal No. 8 - 32
g120628 BOLT 1/4" - 20 x 1/2"
g120910 BOLT, No. 10 - 24 x 3/4"
g121533 SCREW, 1/4" - 20 x 7/16"
g121540 SCREW, terminal No. 10 - 32 x 5/16"

g121749* SCREW, terminal No. 8 - 32 x 1/2"
g121749* SCREW, No. 8 - 32 x 5/16"

g121753* WASHER, shakeproof 1/4"
g121753* WASHER, lock 1/4"

g121841 WASHER, lock No. 8
g121917 NUT, hex. 5/16" - 24
g122122 SCREW, 3/8" - 16 x 3/4"
g122138 SCREW, 3/8" - 16 x 1-1/8"
g123197 NUT, 5/16" - 18
g124543 KEY, 1/8" x 1/2"
g124545 KEY, 1/8" x 5/8"
g124549 KEY, woodruff, 3/16" x 3/4"
g124551 KEY, woodruff, 1/4" x 7/8"

UTILITY ITEMS

Note: Items marked with an asterisk (*), had more than one description listed in the original catalogs

g124829 NUT, hex. 3/8" - 16
g124920 NUT, to body 5/16" - 24
g124934 NUT, 1/2" - 20
g125127 NUT, 3/8" - 16
g125619 PLUG, 1-1/2"
g126045 PLUG, 3/8"
g126460 BOLT, carriage 7/16" - 14 x 2"
g127217 WASHER, lock No. 10
g127832 GUN, grease
g127934 BULB, lamp - #57
g127950 PLUG, drain 1/8" - 27 pipe
g127952 PLUG, oil level (brass)
g128144 WASHER, plain 5/16"
g128270 SCREW, No. 8 x 3/8"
g128270 SCREW, No. 8 x 2/8"
g131015 WASHER, plain No. 8
g131016 WASHER, lock 3/4"
g131044 WASHER, lock No. 6
g131282 BULB, lamp - #53
g131562 NUT, crown 5/16" - 18
g131875 SCREW, No. 6 - 32 x 5/32"
g131949 SCREW, No. 8 - 32 x 3/16"
g132096 SCREW, No. 10 - 32 x 1/4"
g132124 SCREW, No. 10 - 32 x 3/4"
g132903 SCREW, No. 10 - 32 x 1/2"
g132915 SCREW, No. 10 - 32 x 1"
g133043 BOLT, 1/4" - 20 x 3/4" w/OD. and AD.
g133049 BOLT, 1/4" - 20 x 1"
g134211 SCREW, No. 8 - 32 x 5/16"
g134248 SCREW, No. 8 - 32 x 1-1/2"
g134420 BOLT, 1/4" - 20 x 5/8"
g134530 NUT, hex. No. 6 - 32
g134530 NUT, No. 6 - 32
g135337 RIVET, 1/4" x 2-3/8"
g136857 WASHER, lock 7/16"
g136857 WASHER, shakeproof 7/16"
g137130 COTTER, 1/16" x 3/8"

g137396* NUT, pipe 3/16"
g137396* NUT, pipe 3/8" - 24

g137397 NUT, pipe 1/4"

g137398* NUT, pipe 5/16"
g137398* NUT, inverted flare 5/16"

g137404 NIPPLE, 3/8" - 1/8" - C-K
g137405 CONNECTOR
g137406 ADAPTER
g137412 UNION
g137414 UNION, 5/16"
g137420 ELBOW, 3/8" x 1/8"
g137421 ELBOW
g137422 ELBOW
g138018 BOLT, 3/8" - 24 x 4-7/8"

g138479* WASHER, shakeproof No. 10
g138479* WASHER, lock No. 10

g138485* WASHER, lock 5/16"

g138485* WASHER, shakeproof 5/16"

g138489 WASHER, shakeproof 3/8"
g138544 WASHER, shakeproof 3/8"
g141240 PIN, 3/8" x 3/4"
g141246 DOWEL, 3/8" x 1 1/4"
g141539 BUSHING, reducer
g142450 BULB
g143932 PLUG, pipe 3/8"
g143997 PLUG, drain 1/4"
g143999 PLUG, countersunk head 3/4" pipe
g144235 WING NUT 7/16" - 14
g144811 BOLT, No. 10 - 12 x 1/2"
g145195 SCREW, No. 10 x 5/8"
g145494 SPEED NUT 7/16"
g145641 BALL, 5/16"
g147483 BALL, steel 3/16"
g147685 FUSE, - 14 amp.
g148312 WING NUT, 1/4" - 20
g148532 SCREW, No. 10 x 1-1/2"
g148543 SCREW, No. 8 - 3/4"
g149559 FUSE, - 1 amp.
g155103 BOLT, No. 10 - 24 x 3/8"
g155113 BOLT, No. 10 - 24 x 1/2"
g155348 BOLT, clamping 1/4" - 20 x 3/4"
g156112 SCREW, No. 12 - 24 x 7/8"
g156145 SCREW, No. 12 - 24 x 1-1/2"
g157277 SCREW, No. 12 - 24 x 1/2"
g161373 SCREW, No. 6 x 1/2"
g161629 SCREW, No. 8 - 15 x 1/2"
g161645 SCREW, No. 10 - 12 x 1/2"
g161791 SCREW, No. 6 x 3/8"
g161857 SCREW, No. 8 x 3/8"
g161860 SCREW, No. 8 - 15 x 1/2"
g161869 SCREW, No. 8 x 5/8"
g161895 SCREW, No. 10 x 1/2"
g161901 SCREW, No. 10 x 5/8"
g173127 WASHER, sh'prf. 5/16"
g173214 BOLT, 3/8" - 24 x 3-1/8"
g173394 SCREW, 1/4" - 14 x 5/8"

g173741* SCREW, 5/16" x 1/2"
g173741* SCREW, 5/16" - 18 x 1/2"

g174907 SCREW, 1/4" - 20 x 1/2"
g175183 SCREW, 5/16" - 18 x 1-1/4"

g177999* SCREW, No. 14 - 14 x 1/2"
g177999* SCREW, No. 14 x 1/2"
g177999* SCREW, 1/4" x 1/2"
g177999* PLUG, fender apron starter solenoid hold

g178532 WASHER, sh'prf. 5/16"

g178745* SCREW, 1/4" x 5/8"
g178745* SCREW, 1/4" - 14 x 5/8"

g179795 SCREW, 1/4" - 20 x 1/2"
g179803 SCREW, 1/4" - 20 x 1-3/4"
g179814 SCREW, 5/16" - 18 x 5/8"
g179816 SCREW, 5/16" - 18 x 3/4"

UTILITY ITEMS

Note: Items marked with an asterisk (*), had more than one description listed in the original catalogs

g179817 SCREW, 5/16" - 18 x 7/8"
g179819 SCREW, 5/16" - 18 x 1-1/8"
g179821 SCREW, 5/16" - 18 x 1-3/8"
g179825 SCREW, 5/16" - 18 x 1-7/8"
g179827 SCREW, 5/16" - 18 x 2-1/4"
g179828 SCREW, 5/16" - 18 x 2-1/2"
g179837 SCREW, 3/8" - 16 x 3/4"
g179838 SCREW, 3/8" - 16 x 7/8"
g179839 SCREW, 3/8" - 16 x 1"
g179840 SCREW, 3/8" - 16 x 1-1/8"
g179841 SCREW, 3/8" - 16 x 1-1/4"
g179848 SCREW, 3/8" - 16 x 2-1/4"
g179851 SCREW, 3/8" - 16 x 3"
g179859 SCREW, 7/16" - 14 x 1-1/8"
g179861 SCREW, 7/16" - 14 x 1-3/8"
g179862 SCREW, 7/16" - 14 x 1-1/2"
g179890 SCREW, 1/2" - 13 x 2-1/4"
g179892 SCREW, 1/2" - 13 x 2-3/4"
g180018 BOLT, 1/4" - 20 x 5/8"
g180020 SCREW, 1/4" - 20 x 3/4"
g180022 BOLT, 1/4" - 20 x 1"
g180077 BOLT, 5/16" - 18 x 3/4"
g180078 SCREW, 5/16" - 18 x 7/8"
g180079 SCREW, 5/16" - 18 x 1"
g180081 BOLT, 5/16" - 18 x 1-1/4"
g180081 SCREW, 5/16" - 18 x 1-1/4"
g180085 SCREW, 5/16" - 18 x 1-3/4"
g180123 BOLT, 3/8" - 16 x 1-1/8"
g180124 SCREW, 3/8" - 16 x 1-1/4"
g180134 BOLT, 3/8" - 16 x 2-1/2"
g180147 SCREW, 7/16" - 14 x 4-1/4"
g180368 NUT, hex. 5/16" - 24
g181003 BOLT, 1/4" - 28 x 5/8"
g181004 BOLT, 5/16" - 24 x 1-1/8"
g181311 BOLT, 1/4" - 28 x 5/8" - C-K

g181313 BOLT, 1/4" - 28 x 1" C-K
g181313 SCREW, 1/4" - 28 x 3/4"

g181333 SCREW, 5/16" - 24 x 5/8" - C-K
g181338 BOLT, 5/16" - 24 x 7/8"
g181341 BOLT, 5/16" - 24 x 1-1/4"
g181346 BOLT, 5/16" - 24 x 1-7/8"
g181360 BOLT, 3/8" x 24 x 3/4" (3/8" - 24 x 3/4"?)
g181364 BOLT, 3/8" - 24 x 1"
g181385 BOLT, 3/8" - 24 x 3" C-K
g181399 BOLT, 7/16" - 20 x 1-3/8"
g181411 BOLT, 7/16" - 20 x 3"
g181415 BOLT, 7/16" - 20 x 4"
g181429 SCREW, 1/2" - 20 x 1-1/4"
g181441 BOLT, 1/2" - 20 x 2-3/4"
g181574 BOLT, 1/4" - 28 x 1-3/8"
g181608 BOLT, 5/16" - 24 x 1"
g181614 BOLT, 5/16"-24 x 1-1/2"
g181636 BOLT, 3/8" - 24 x 7/8"
g181639 BOLT, 3/8" - 24 x 1-1/4"
g181643 BOLT, 3/8" - 24 x 1-1/2" - K
g181647 BOLT, 3/8" - 24 x 1-7/8"
g181670 BOLT, 7/16" - 20 x 1-1/2"
g186277 SCREW, 3/8" - 16 x 2-3/8"
g186279 SCREW, 3/8" - 16 x 3-1/8"
g186282 SCREW, 3/8" - 16 x 3-1/4"
g186284 SCREW, 3/8" - 16 x 3-3/4"
g186310 BOLT, 3/8" - 24 x 3-1/2"
g186318 BOLT, 3/8" - 24 x 5-1/4" - w/AD.
g186639 BOLT, 3/8" - 24 x 2-3/4"
g186986 SCREW, 5/16" x 1/2"
g187227 BOLT, 3/8" - 24 x 3-1/8"
g189331 BOLT, 3/8" - 24 x 4"
g191350 GREASE FITTING
g191637 BOLT, 3/8" - 24 x 5-3/4"
g191758 GREASE FITTING, alemite straight
g193213 BOLT, 7/16" - 20 x 5-1/4"

g200006 TERMINAL, eyelet
g217232 SCREW and WASHER, 5/16" - 18 x 9/16"
g217233 SCREW and WASHER, 5/16" - 18 x 3/4"
g217904 SCREW, 1/4" - 20 x 7/8"
g271163 NUT, No. 8 - 32

g271166 NUT and WASHER, hex. No. 10 - 24
g271166 NUT, hex. No. 10
g271166 NUT and LOCK WASHER, hex. No. 10 - 24

g271169 NUT and WASHER, hex. No. 10 - 32
g271172 NUT and WASHER, hex. 1/4" - 20
g271184 NUT, hex. 5/16" - 18
g271287 GREASE FITTINGS
g271288 GREASE FITTINGS
g271482 NUT and WASHER, No. 6 - 32
g271506 NUT, hex. 7/16" - 20
g271506 NUT, 7/16" - 20
g272121 NUT, lock hex. 7/16"
g272599 NUT, hex. 7/16" - 14
g272599 NUT, hex. 7/16" - 14
g272600 NUT, lock 7/16 - 20
g272614 NUT, to shaft hex. 7/16" - 20 w/power brakes
g273286 NUT, No. 6 - 32

g427934 SCREW, 3/8" - 16 x 1 1/4"
g427940 SCREW, 3/8" - 16 x 1 1/2"
g440491 NUT and WASHER 1/4" - 20
g440491 NUT, 1/4" - 20
g442695 SCREW and WASHER to cyl. block 5/16" - 18 x 5/8"
g442824 NUT, hex. 1/4" - 28
g442828 NUT, 3/8" - 24
g442904 PIN, locating
g442918 PIN, groove
g443609 SCREW and WASHER, 5/16" - 18 x 7/8"
g443945 SCREW, 5/16" - 18 x 1"
g443976 CONNECTOR
g444148 TEE
g444687 PLUG, pipe 1/8" - 27
g444687 PLUG, oil line 1/8"
g444687 PLUG, body 1/8" - 27
g445177 CLIP
g445560 SCREW, No. 10 x 1-3/4" - C-K

UTILITY ITEMS

Note: Items marked with an asterisk (*), had more than one description listed in the original catalogs

g445686 PLUG, pipe 3/8"
g446179 WASHER, plain 1/4"
g446211 WASHER, plain 7/16"

g446363 WASHER, plain 5/16"
g446363 WASHER, plain 3/8"

g446470 WASHER, plain 3/8"
g446484 WASHER, plain 1/2"
g446891 BOLT, No. 8 - 32 x 5/8"
g448005 SCREW, No. 6 x 1/2"
g448935 SCREW, No. 10 x 1/2"
g451006 NUT, hex. 5/16" - 24
g451009 NUT, locking 3/8" - 16
g451010 NUT, hex. 3/8" - 24
g451735 SCREW and WASHER, No. 10 - 24 x 3/8"
g451786 RETAINER, spring
g451790 SCREW, No. 10 - 16 x 3/8"
g453345 NUT, hex. 5/16" - 24
g453593 BALL, bearing, - 3/8"
g454645 BULB, parking and signal lamp
g454646 BULB, back-up lamp
g454775 PIN, 3/32" x 9/16"
g455136 BULB, dome lamp (Mazda No. 1004)
g455490 BULB, trunk light (Mazda No. 1003)
g455640 FUSE, - 7-1/2 amp.
g456326 BOLT, No. 8 - 32 x 1-1/8"
g456643 SCREW, 5/16" - 18 x 3/4"
g456796 SEALED BEAM UNIT, head lamp

ACCESSORY CODES

RADIOS

AC-2747 Stratoline Push Button Tuning Radio - 1956 Sports Models
AC-2748 Starline Manual Tuning Radio - 1956 Sports Models
AC-2788 Radio Adapter Kit for Right Hand Control - 1956 Only
AC-2688 Internally Controlled Front Mount Reel Antenna - All 1956-55 Models
AC-2689 Manually Controlled Front Mount Antenna - All 1956-55 Models
AC-2775 Dual Manually Controlled Rear Mount Antenna, Pair - All 1956 Sports Models
AC-2777 Rear Seat Radio Speaker - All 1956 Models
AC-2302 Rear Seat Radio Speaker -All 1956-55-54-53 Models

ORNAMENTS

AC-2799 Chrome Stainless Spoke Type Wheel Discs - All 1956-55-54-53 Models (4 required). Set of 4
AC-2738 Chrome Wheel Discs - All 1956 Models (4 required), Set of 4
SP-50048 Deluxe License Plate Frame - All Cars
AC-2495 Regal License Plate Frame (Plastic Window) - All Cars
AC-2754 Chromium Exhaust Extension - 1956 Sports and Station Wagon Models
AC-2796 Chromium Valve Covers, Golden Hawk Only. Pair

PROTECTION

AC-2704 Gas Door Guard - 1956-55-54-53 Sports Models
AC-2699 Door Handle Guards - All 1956-55-54-53 Models. Pair
AC-2367 Auxiliary Floor Mat, Left Front (L.H.C.) - 1956-55-54-53 Sports Models
AC-2368 Auxiliary Floor Mat, Right Front (L.H.C.) - 1956-55-54-53 Sports Models
SP-50023 Curb Alarm - All Cars. Pair
AC-2028 Front Fender Splashguards - All 1956-55-54-53 Models. Pair
AC-2029 Accelerator Wear Pad - All 1956-55-54-53 Models
AC-235 Locking Gas Cap - All 1956-55-54-53 Models

SAFETY

AC-2728 Super-Vue Outside Rear View Mirror - All 1956-55-54-53 Models, R or L
AC-2340 Strat-O-Vu Outside Rear View Mirror - All 1956-55-54-53 Models, R or L
SP-50060 Front Seat Belt Kit, Gray - 1956-55-54-53 Models
SP-50061 Front Seat Belt Kit, Green - 1956-55-54-53 Models
SP-50062 Front Seat Belt Kit, Red - 1956-55-54-53 Models
SP-50063 Front Seat Belt Kit, Blue - 1956-55-54-53 Models
SP-50064 Front Seat Belt Kit, Brown - 1956-55-54-53 Models
SP-50065 Front Seat Belt Kit, Black - 1956-55-54-53 Models
SP-50070 Rear Seat Belt Kit, Gray - 1956-55-54-53 Models
SP-50071 Rear Seat Belt Kit, Green - 1956-55-54-53 Models
SP-50072 Rear Seat Belt Kit, Red - 1956-55-54-53 Models
SP-50073 Rear Seat Belt Kit, Blue - 1956-55-54-53 Models
SP-50074 Rear Seat Belt Kit, Brown - 1956-55-54-53 Models
SP-50075 Rear Seat Belt Kit, Black - 1956-55-54-53 Models
AC-2774 Safety Windshield Washer - All 1956 Models
Ac-2354 Interior Glare-Proof Tilt Mirror - All 1956-55-54-53 Models
AC-2710 Power Brakes Kit - All 1956-55-54 Models (L.H.C.)
SP-50049 Brake Fluid Safety Reservoir

HEAT & AIR CONDITIONING

AC-2769 Complete Climatizer - 1956 Sports Models

AUXILIARY LIGHTS

AC-2765 Internally Controlled Spotlight, Left Side - 1956 Sports Models
AC-2766 Internally Controlled Spotlight, Right Side - 1956 Sports Models
AC-2762 *Automatic Back-up Light Kit - 1956 Sports and Station Wagon Models. Pair

*Note: Back-up Light Kit AC-2762 does not include operation switch. Switch is not required for Automatic Transmission cars. For cars with Overdrive Transmission order switch as listed below:

AC-2334 Back-up Light Switch, for cars less Automatic Transmission and without Power Steering
AC-2444 Back-up Light Switch, for cars less Automatic Transmission but equipped with Power Steering
AC-2767 Automatic Trunk and Utility Light - All 1956 Models
AC-2752 Automatic Glove Compartment Light - 1956 Sports Models
AC-2776 Automatic Parking Brake Warning Light - all 1956 Models

COMFORT AND CONVENIENCE

AC-2756 Automatic Electric Clock - 1956 Sports Models
AC-2750 Automatic Cigarette Lighter - All 1956 Models

ACCESSORY CODES

AC-2787 Auto Compass - All 1956 and Prior Models
SP-50055 Traffic Light Viewer - All 1956 and Prior Models
AC-1855 Visor Vanity Mirror - All Cars
AC-2366 Kleenex Dispenser - All 1956-55-54-53 Models
1540676 Kleenex Dispenser Adapter Kit - 1956 Sports Models

AUTO LUGGAGE IN RANGER TAN NAUGAHYDE

AC-2430 Men's 24" Two Suiter
AC-2431 Men's 21" Companion Case
AC-2432 Ladies 21" Overnight Case
AC-2433 Ladies 21" Wardrobe Case
AC-2434 Ladies 26" Pullman Case
AC-2435 Ladies 12" Cosmetic Case

CUSHION TOPPERS - 1956 MODELS

AC-2791 Front, Sports Models, Black
AC-2792 Front, Sports Models, Blue
AC-2793 Front, Sports Models, Green
AC-2794 Front, Sports Models, Tan
AC-2795 Rear, Sports Models, Black
AC-2652 Rear, Sports Models, Maroon
AC-2653 Rear, Sports Models, Blue
AC-2654 Rear, Sports Models, Green
AC-2655 Rear, Sports Models, Tan
SP-50044 Air Mattress

SPECIAL CAR TREATMENTS

Lustur-Seal Beauty Treatment
Kar-Kleen Upholstery Clean
Undercoating

APPEARANCE MATERIALS

AC-1464 Cleaner, Chrome and White Wall Tire, 7 oz.
SP-50013 Cleaner, Fabric, Pint
SP-50014 Cleaner, Fabric, Gallon
SP-50005 Cleaner, KarKleen Upholstery, 22-3/4 oz.
SP-50002 Lustur-Seal Haze Cream, 8 oz.
SP-50004 Lustur-Seal Car Shampoo, Box of 3 Packs
SP-50047 Polish, Chrome, 8 oz.
AC-1468 Polish and Cleaner, Pint
AC-1469 Polish and Cleaner, Gallon
SP-50011 Remover, Tar and Road Oil, 8 oz.

MAINTENANCE MATERIALS

SP-50026 Anti-Freeze, Permanent, Case of 24 Quarts
SP-50027 Anti-Freeze, Permanent, Case of 6 Gallons
SP-50045 Cement, Weatherstrip, 5-1/2 oz. tube
SP-50046 Cement, Gasket, 2 oz.
SP-50009 Cleaner, Cooling System, duplex can
SP-50018 Fluid, Automatic Transmission, Case of 24 quarts
SP-50019 Fluid, Automatic Transmission, Case of 6 Gallons
AC-483 Fluid, Delco Shock Absorber, Gallon
AC-485 Fluid, Delco Shock Absorber, Quart
AC-1435 Fluid, Houdaille Shock Absorber (L-1404), Pint
AC-1436 Fluid, Houdaille Shock Absorber (L-1404), Quart
AC-2402 Fluid, Heavy Duty Brake No. 21B, 12 oz.
AC-2403 Fluid, Heavy Duty Brake No. 21B, Quart
AC-2404 Fluid, Heavy Duty Brake No. 21B, Gallon
AC-2103 Fluid, Lock-Ease, Graphited, 4 oz. can
SP-50016 Flush, Radiator, Pint
AC-2739 Lubricant, Miracle Power Engine, Pint
AC-2692 Lubricant, Miracle Power Engine, Quart
AC-2107 Lubricant, RuGlyde Rubber, 8 oz.
AC-375 Lubricant, Door-Ease Stick, Consumer Size
SP-50028 Oil Additive, T.M.C., Case of 24 15 oz. Cans
AC-1337 Pib Liquid Insulation, 1 oz.
AC-1338 Pib Liquid Insulation, 4 oz.
SP-50017 Rust Resistor, Cooling System, Pint
SP-50008 Solvent, Windshield Washer, 6 oz.
SP-50012 Stop Leak, Radiator, 10 oz.

NUMERICAL INDEX

AC- 235____0307
AC-1855____AC45
AC-2029____0312
AC-2302____AC12
AC-2334____0632
AC-2366____AC13B
AC-2367____AC41
AC-2368____AC41
AC-2385____AC47
AC-2425____1409
AC-2444____0632
AC-2495____0622
AC-2516____AC1
AC-2681____AC45
AC-2688____AC12C
AC-2689____AC12C
AC-2710____1112
AC-2728____AC45
AC-2729____AC45
AC-2738____1409
AC-2747____AC12A
AC-2748____AC12A
AC-2750____AC14
AC-2752____AC13A
AC-2754____0403
AC-2756____1718
AC-2762____0632
AC-2765____0633
AC-2766____0633
AC-2767____AC30
AC-2769____AC1
AC-2774____AC49
AC-2775____AC12C
AC-2776____1116
AC-2777____AC12B
AC-2796____0103
AC-2799____1409
AC-2806____0621
AC-2810____AC16
AC-2812____AC45
AC-2813____AC41
AC-2814____AC41
AC-2815____AC41
AC-2816____AC41
AC-2836____AC45
AC-2864____AC45
AC-2893____AC45
s-19_____0603
s-20_____0603
SP-50008___AC49
SP-50057___0118
SP-50060___AC27
SP-50061___AC27
SP-50062___AC27
SP-50063___AC27
SP-50064___AC27
SP-50065___AC27
SP-50067___1104
SP-50068___1104
SP-50069___1104
SP-50070___AC27
SP-50071___AC27
SP-50072___AC27
SP-50073___AC27
SP-50074___AC27
SP-50075___AC27
SP-50079___AC17
SP-50098___0108
__104x252__1518
__104x253__1518
__1093x54__1604
__1160x1___0307
__1161x19__0620
__1296x252_1716
__1296x607_1519
__1296x614_1413
__1296x90__1803
__12x188___0307
__1458x2___2338
__1463x1___23
__1479x9___2321
__1501x10__0308
__1501x21__1310A
__1501x25__0312
__1501x30__1602
__1501x30__1622
__1501x8___0608
__1523x18__0617
__1526x35w_2347B
__1526x47__1601
__1526x47__1604
__1529x19__0618
__1529x21__0632
__1533x7___1604
__1542x28__1409
__1545x2___1601
__1570x3___1604
__1570x3___1604
__1570x3___1605
__1578x10__2338
__1578x19__1604
__1578x2___0307
__1578x23__1622
__1578x24__0622
__1578x27__1305A
__1578x27__135B
__1578x3___1601
__1578x35__1601
__1578x36__0502
__1578x39__1604
__1578x45__1601
__1578x45__1602
__1578x7___2338
__1622x2___0617
__1624x1___2320D
__1624x1___2324C
__1651x6___1112
__1651x8___1601
__1721x27__1310A
__1743x1___1604
__1743x1___1605
__1743x1___2321
__1743x15__1605
__1743x19__1604
__1743x9___1605
__1770x1___2320A
__1770x1___2324A
__1783x1___1602
__1811x3___2310
__1811x3___AC1
__1840x1___1605
__1840x1___165
__1897x1___065
__1902x2___2317D
__1902x3___1622
__1903x2___2317D
__1903x3___2310
__1904x10__1601
__1905x14__0502
__1905x16__1622
__1905x18__1601
__1906x14__2310
__1906x16__1601
__1906x16__2338
__1906x25__1602
__1908x1___2320E
__1908x5___1604
__1917x1___2318B
__1921x2___1604
__1942x1___2347A
__1950x5___2327
__1957x2___1305A
__1957x2___1305B
__1957x4___1601
__1957x5___1601
__1959x10__0502
__1959x11__0502
__1959x4___0502
__1959x4___1620
__1960x2___2320C
__1960x2___2321
__1960x3___1602
__1960x4___1305A
__1960x4___1305B
__1962x1___1602
__1992x1___2320B
__2033x2___1620
__2035x1___2325
__2046x2___2316B
__2049x1___2319
__2049x15__2320G
__2049x16__2320D
__2049x6___1604
__2050x2___1112
__2052x3___1604
__2052x4___1605
__2052x4___1605
__2061x2___2317B
__2068x1___0850B
__2075x1___0501
__2080x1___1304B
__2082x1___0608
__22x52____1116
__3035x1___0502
__3036x3___0759
__3036x3___1312A
__3036x3___1312B
__3037x1___2313
__41x133___1309B
__41x156___1203
__41x184___1602
__41x302___0308
__41x336___1301A
__41x359___1301A
__41x359___1301B
__41x359___1803
__41x359___1805
__41x377___1801
__41x429___1110
__41x548___1108
__41x555___0502
__41x557___0503
__41x557___1602
__41x562___1107
__41x562___1209
__41x562___1301A
__41x562___1301B
__41x570___1501
__42x1_____1116
__42x10____1109
__42x114___1110
__42x115___0206
__42x44____0854B
__42x57____0760
__44x548___1104
__959x40___1721
___30264___0731
___31834___0731
_122825____0702
_134030____0721
_165167____1002
_167320____0312
_170710____1302A
_171154____0627
_172651____1107
_172653____0308
_172653____0841B
_172653____2327
_176203____0606
_176223____0608
_176404____0701
_177413____0601
_179233____0745
_180747____0745
_182050____0627
_182050____2327
_182099____0116
_182540____0901
_183342____0608
_184161____1005
_184291____0206

NUMERICAL INDEX

_184291____0760
_184526____0312
_184526____0854B
_185163____1112
_185164____1104
_185164____1112
_185165____1104
_185165____1112
_185336____0732
_185630____0722
_185630____0728
_187322____1105
_187425____0901
_187763____0307
_188322____1105
_188323____1105
_188324____1105
_188521____0721
_188522____0721
_188523____0721
_188524____0721
_188541____0722
_189134____1302A
_189696____1104
_189696____1112
_189888____0308
_190032____1005
_190033____1005
_190035____1005
_190036____1005
_190038____1005
_190039____1005
_190040____1005
_190041____1005
_190047____1004
_190048____1004
_190460____0606
_190470____0308
_190470____0731
_190849____1310A
_190895____0721
_190896____0721
_190897____0721
_190983____1402
_190984____1402
_190985____1402
_192057____0854B
_192414____1305A
_192545____0627
_192545____0731
_192545____1310A
_192545____AC1-A
_192545____AC1-B
_192546____2320G
_192546____2327
_193089____0705
_193684____1202
_193685____1202
_193686____1202
_193687____1202
_193688____1202
_194383____0307
_194461____0115
_194557____0205
_194574____1310A
_194683____1108
_194697____1107
_194702____1107
_194844____1002
_194845____1002
_194846____1002
_195235____0732
_195407____AC1-A
_195470____1104
_195506____1116
_195567____1107
_195569____1107
_195792____0621
_195893____0731
_196183____0731
_196296____0608
_196308____1402
_196309____1402
_196324____1102
_196406____0745
_196547____1104
_196551____1104
_196555____1104
_196562____1104
_196821____1310A
_196859____1202
_196930____1402
_196931____1402
_196965____1006
_197042____1209
_197097____1103
_197100____1304A
_197101____1304A
_197108____1302A
_197109____1302A
_197110____1302A
_197126____1103
_197216____1002
_197219____0760
_197347____0302
_197436____1002
_197565____0747
_198061____0627
_198391____0302
_198392____0302
_198649____AC1-B
_198650____AC1-B
_198667____0619
_198667____0620
_198667____0627
_198667____0632
_198667____0731
_198667____1310A
_198777____AC1-B
_198933____0302
_198938____0302
_199218____1112
_199379____1005
_199385____1204
_250738____1604
_256116____0731
_261419____1604
_261419____2349B
_264388____1413
_265709____2321
_267313____2317B
_267313____2320F
_267313____2324E
_268469____2327
_271149____2316B
_271441____2317A
_271651____2316B
_273846____0617
_274974____1601
_274974____1620
_276526____0617
_278416____AC14
_278667____2324E
_280821____2324B
_281089____2320E
_281089____2324D
_283157____1620
_284299____2338
_284505p___1620
_284506____2316B
_284991____2310
_285005p___2310
_285030____2320E
_285030____2324D
_285120____1604
_285121____1604
_285124____1604
_285192____0617
_285640____2316D
_285641____2351
_285968____0617
_285974____0617
_285976____0617
_286105____1622
_286256____2310
_286415____1604
_286444____2310
_286471____2303
_286845____0502
_287169____0732
_287169____1622
_287233____2320E
_287401____0617
_287427____1610
_287532____2310
_287645____2320A
_287648____2310
_287680____2303
_287693w___2349B
_288606____2316B
_288609____2308
_289710p___2330
_290162p___2310
_290165x3__2310
_290169____2310
_290206____2330
_290235____2310
_290236____2310
_290237____2310
_290296w___2321
_290297w___2321
_290770____2321
_290771____2321
_290772____2321
_290773____2321
_291145w___AC13
_291145w___AC13A
_291167____2310
_291214____2303
_291222____0620
_291874____0617
_292050x31_2383
_292050x32_2338
_292050x33_2338
_292050x7__2338
_292261____0617
_292268____1620
_292304____2316D
_292307____2316D
_293170x6__2310
_293274____2330
_293609____2330
_293663____2349B
_293668____2349B
_293669____2349B
_293686____0503
_293749____2349B
_293762____2349B
_294004____2303
_294090____2313B
_294090____2330
_295796____2321
_296979____0617
_297386____2338
_297642____2316D
_297803x6__2317D
_297837____2317C
_297876w___2330
_297879____2330
_297880____2330
_297881____2330
_297925v___AC12
_298092____2330
_298124p___2339
_298125____2339
_298129____2339
_298130____2339
_298248____2351
_298268w___2325
_298300____2349B
_298301w___2349B
_298316w___2317B
_298319____2317B
_298340____1601

NUMERICAL INDEX

_298341____1601
_298583x5__2316C
_298656x15_2345
_298669p___2309
_298788____2310
_298789____2310
_298824p___2327
_298825____AC13A
_298974____2317B
_299057____1812
_299078____1622
_299088x16_2344
_299088x17_2344
_299088x18_2344
_299088x19_2344
_299088x20_2344
_299089x16_2344
_299089x17_2344
_299089x18_2344
_299089x19_2344
_299089x20_2344
_299094____1622
_299198w___2345
_299264p___2310
_299288____1107
_299288____2324B
_299358____2330
_299620____2303
_299653x6__2310
_299654____2310
_299744____2347A
_299745____2347A
_299756x1__2341A
_299776____2310
_299777____1620
_299786____2310
_299847____2317A
_299850____1604
_299851____1604
_299976____2320D
_299977____2320D
_299983____2320D
_299984____2320D
_302735____2305
_302738____2305
_302739____2305
_302884____2324B
_302885____2324B
_302910____2360F
_302911____2360F
_303030____2330
_303031____2330
_303056p___2338
_303068p___1620
_303069p___1620
_303078p___1604
_303151____2347A
_303152____2347A
_303200____2316B
_303201____2316B
_303210____2316B
_303211____2316B
_303260____2320A
_303261____2320A
_303262____2320A
_303263____2320A
_303264____2320A
_303265____2320A
_303270p___2320B
_303271p___2320B
_303340____2321
_303341____2321
_303342____2321
_303343____2321
_303374____2321
_303375____2321
_303380____2320C
_303381____2320C
_303382____2321
_303383____2321
_303389____2321
_303416____2320C
_303417____2320C
_303426____2321
_303427____2321
_303428____2321
_303429____2321
_303492____2321
_303493____2321
_303496____2324B
_303497____2324B
_303527____2347A
_303532____2347A
_303533____2347A
_303557____2304
_303558____2304
_303559____2304
_303560____2304
_303561____2304
_303571____2325
_303584____2319
_303585____2319
_303589w___2345
_303591____2347A
_303615____2324B
_303629____1604
_303646p___1604
_303648p___1604
_303651p___1601
_303654____2324A
_303655____2324A
_303658____2324A
_303659____2324A
_303660____2324B
_303661____2324B
_303662p___2324B
_303663____2324D
_303708____2324C
_303709____2324C
_303710____2320D
_303711____2320D
_303714____2324A
_303715____2324A
_303734____2324B
_303743p___2310
_303744p___2310
_303745p___2310
_303757____2360J
_303783____2325
_303784____2325
_303792w___2324A
_303793____2324A
_303827____2324C
_303834____2321
_303835____2321
_303836____2324F
_303837____2324F
_303840____2349B
_303894____2317D
_303925____2349B
_303928____2316C
_303929____2316C
_303930____2316C
_303931____2316C
_303974____2320D
_303978____2320D
_303981____2320D
_303982____2320D
_303983____2320D
_304000w___2321
_304001w___2321
_304002w___2321
_304003w___2321
_304109____2304
_304152____2304
_304153____2304
_304181____2320C
_304184p___2310
_304187____2320B
_304294____2321
_304374____2321
_304394____2320B
_304403____2320D
_304427p___2310
_304446____2304
_304447____2304
_304450p___2310
_304458____2327
_304470____2324A
_304471____2324A
_304476____2320A
_304477____2320A
_304478____2321
_304479____2321
_304562____2320D
_304563____2320D
_304650p___1601
_304651p___1601
_304656____2360A
_304664____2360B
_304665____2360B
_304666____2360G
_304667____2360G
_304682____2360D
_304683____2360D
_304684____2360H
_304698p___2324D
_304699p___2324D
_304703____0503
_304725p___1305A
_304725p___1305B
_304742____2324A
_304759p___1620
_304771____2317D
_304800____2321
_304801____2321
_304802____2321
_304803____2321
_304804____2320C
_304808____AC13A
_306000____2320D
_306026p___1604
_306027p___1604
_306104____2325
_306105____2325
_306186____2320D
_306187____2320D
_306188____2316C
_306189____2316C
_306331x1__2360J
_306347p___2313A
_306598____1601
_306599____1601
_306910x1__2339
_306912x1__2339
_307002w___2315
_307006____2315
_307013____2315
_307029x11_2309
_307029x12_2309
_307029x13_2309
_307029x14_2309
_307255____2316B
_307541____2349C
_307546____2321
_307547____2321
_307554____2324B
_307555____2324B
_307591w___2330
_307803x3__2320G
_307803x3__2327
_307842____0307
_308062____0502
_308128____2360H
_308138____0502
_308139____1622
_308144____1622
_308218p___1604
_308219p___1604
_308234____1604
_308237____1604
_308395____2313
_308454w___2320G
_308454w___2327

NUMERICAL INDEX

_308455w___2320G
_308457____2320G
_308457____2327
_308458____2320G
_308460____2320G
_308460____2327
_308565x1__2325
_308687t___2323C
_308698____2323C
_308712____2323C
_308742____1622
_308747____1622
_308833t___2323C
_308907p___1620
_308945p___2310
_308957____0619
_309164p___2339
_309165____2339
_309166____2339
_309173____0619
_309315x11_2309
_309315x12_2309
_309315x13_2309
_309315x14_2309
_309343____2313
_309470____2320E
_309484____2317C
_309485____2317C
_309993____1601
_309994____1601
_310068____2320G
_310069____2320G
_310081____2320G
_310086____2317C
_310087p___2320B
_310089p___2320B
_310090____2320B
_310105____2313
_310106____2313
_310128____2320E
_310129____2320E
_310146____2339
_310147____2339
_310174____2320G
_310207____2313
_310361____2327
_310366____2327
_310425x1__2320G
_310425x1__2327
_310426x1__2320G
_310436____2320G
_310436____2327
_310443____2327
_310568____2349B
_310673____2347B
_310795____0617
_310844____2320E
_310895____2327
_311002____2327
_311029____0619
_311056x1__2320G
_311056x2__2320G
_311056x3__2320G
_311074____2327
_311075____2349C
_311077____2349C
_311079____2349C
_311080____2349C
_311081____2349C
_311082____2349B
_311083____2349B
_311088____2349C
_311089____2349C
_311134p___2327
_311205____2327
_311216____2325
_311217____2325
_311221w___2315
_311222w___2315
_311269x1__1601
_311269x2__1601
_311273____2315
_311347____2320H
_311353____2320H
_311361____2320H
_311362____2320H
_311364____2320H
_311401p___2330
_311441____2349C
_311446x1__1604
_311446x2__1604
_311446x2__2303
_311446x3__1604
_311446x4__2303
_311471____0617
_316419____0203
_330344____0312
_347579____0722
_347580____0722
_354310____0505
_360433____0109
_371245____0601
_371860____0702
_371860____0702
_371860____0705
_371861____0702
_371861____0705
_371862____0702
_371862____0705
_371863____0702
_371863____0705
_373702____0103
_394024____0601
_403502____0202
_410761____0302
_410864____0230
_410901____0225
_412404____0505
_412489____0505
_418419____0728
_418431____0729
_418432____0729
_418433____0729
_418436____0729
_418437____0722
_418438____0722
_421071____0817B
_421087____0817B
_421089____0820B
_421128____0820B
_421146____0817B
_421327____0811B
_421599____0225
_421731____0207
_421905____0820B
_423215____0814B
_423264____0705
_423265____0705
_423293____0814B
_423367____0820B
_423417____0225
_423425____0225
_423675____0225
_426059____0505
_426205____0115
_426205____0811B
_426431____0505
_426709____0854B
_426710____0854B
_426719____0854B
_427042____0107
_427056____0103
_427104____0105
_427130____0109
_427343____0103
_433134____0225
_433134____0811B
_433181____0854B
_433248____0811B
_433310____0109
_434425____0225
_436123____0606
_436125____0606
_436129____0606
_436577____0601
_436632____0302
_436633____0302
_436634____0302
_436637____0302
_436643____0302
_436649____0302
_436662____0302
_436680____0302
_436691____0302
_436692____0302
_436695____0302
_436697____0302
_436950____0302
_436988____0301
_436989____0301
_436990____0301
_436992____0301
_436994____0301
_439632____0603
_439830____0603
_439831____0603
_439961____0602
_440048____0301
_440050____0505
_440061____0104
_440062____0505
_440065____0105
_440066____0504
_440073____0116
_440075____0505
_440089____0103
_440140____0103
_440143____0116
_440152____0603
_440208____AC1
_440319____0103
_440333____0102
_440333____0505
_440336____0102
_440351____0601
_440352____061
_440353____016
_440354____0116
_440363____0103
_440366____0104
_440372____0104
_440372____0301
_440380____0104
_440381____0104
_440382____0104
_440383____0104
_440384____0104
_440386____0505
_440405____0108
_440448____0506
_440466____0103
_440469____0102
_440474____0102
_440529____0106
_440531____0106
_440532____0106
_440566____0505
_440575____0109
_440598____0105
_440600____0116
_440601____0116
_440613____0302
_440625____0302
_440629____0301
_440642____0116
_440645____0103
_440649____0103
_440655____0117
_440657____0117
_440664____0103
_440668____0103
_440669____0103
_440670____0103
_440671____0103

NUMERICAL INDEX

_440679____0116
_440681____0116
_440682____0301
_440686____0105
_440703____0105
_440710____0104
_440715____0105
_440722____0116
_440725____0115
_440728____0116
_440750____0109
_440753____0109
_440769____0302
_440770____0302
_440772____0506
_440773____0506
_440775____0107
_440776____0107
_440778____0109
_440784____0117
_440792____0304
_440799____0608
_440801____0115
_440816____0118
_440821____0603
_440841____0105
_440842____0104
_440843____0104
_440853____0109
_440866____0109
_440866____0401
_440885____0109
_440893____0109
_440905____0109
_440975____0106
_440988____0116
_443159____0225
_443166____0225
_443171____0106
_446740____0109
_446741____0109
_446742____0109
_446743____0109
_450013____0832B
_450014____0832B
_450075____0828B
_450091____0828B
_450092____0828B
_450095____0828B
_450123____0817B
_450203____0828B
_450208____0225
_450209____0225
_450216____0225
_450217____0225
_450218____0225
_450219____0225
_450239____0837B
_450257____0225
_450265____0823B
_450269____0823B
_450298____0817B
_450302____0837B
_450306____0824B
_450307____0824B
_450309____0824B
_450310____0824B
_450312____0817B
_450332____0817B
_450333____0837B
_450337____0823B
_450338____0225
_450340____0832B
_450345____0230
_450346____0230
_450348____0828B
_450350____0817B
_450352____0830B
_450354____0837B
_450358____0830B
_450372____0832B
_450378____0225
_450379____0824B
_450381____0832B
_450395____0832B
_450397____0832B
_450398____0832B
_450399____0832B
_450401____0827B
_450407____0832B
_450418____0832B
_450430____0827B
_450431____0827B
_450432____0827B
_450435____0827B
_450437____0827B
_450440____0827B
_450442____0827B
_450443____0827B
_450444____0827B
_450445____0827B
_450449____0832B
_450467____0832B
_450468____0832B
_450472____0832B
_450474____0827B
_450477____0837B
_450479____0837B
_450491____0817B
_450492____0817B
_450493____0817B
_450494____0817B
_450495____0817B
_450504____0230
_450519____0820B
_450521____0824B
_450522____0824B
_450523____0824B
_450528____0832B
_450529____0832B
_450533____0811B
_450537____0830B
_450540____0828B
_450541____0828B
_450544____0830B
_450546____0830B
_450550____0832B
_450556____0832B
_450580____0832B
_450649____0832B
_450660____0225
_450670____0225
_450678____0225
_450692____0832B
_450706____0832B
_450707____0832B
_450714____0832B
_450715____0832B
_450722____0832B
_450756____0832B
_450768____0830B
_450772____0837B
_450773____0832B
_450774____0832B
_450775____0832B
_450793____0832B
_450795____0832B
_450798____0832B
_450819____0847B
_450843____0811B
_450849____0837B
_450854____0827B
_450856____0827B
_450857____0827B
_450858____0832B
_450860____0817B
_450861____0832B
_450890____0827B
_450891____0827B
_450894____0832B
_455556____0103
_455815____0105
_458294____0225
_458319____0302
_458320____0302
_458361____0601
_458362____0601
_458363____0601
_458400____0105
_458401____0105
_458402____0105
_458403____0105
_458406____0107
_458407____0107
_458408____0107
_458409____0107
_458410____0505
_458424____0747
_458427____0747
_458429____0747
_458430____0747
_458431____0747
_458432____0747
_458433____0747
_458434____0747
_458435____0747
_458436____0747
_458438____0701
_458440____0702
_458441____0702
_458442____0702
_458445____0702
_458449____0702
_458450____0702
_458451____0702
_458452____0702
_458453____0704
_458455____0703
_458457____0703
_458458____0703
_458459____0703
_458460____0703
_458461____0703
_458462____0703
_458463____0704
_458465____0701
_458466____0701
_458467____0701
_458468____0701
_458469____0701
_458470____0705
_458471____0705
_458472____0705
_458479____0720
_458480____0720
_458481____0702
_458482____0702
_458483____0702
_458484____0702
_458485____0702
_458486____0702
_458488____0720
_458489____0722
_458494____0725
_458496____0725
_458502____0731
_458513____0108
_458514____0108
_458560____0601
_458563____0601
_458566____0601
_458569____0601
_458570____0601
_458571____0601
_458572____0601
_458573____0601
_458574____0601
_458575____0601
_458576____0601
_458577____0601
_458578____0601
_458589____0601
_458631____0606
_458668____0103

NUMERICAL INDEX

_458669____0100
_458670____0102
_458671____0115
_458672____0109
_458673____0109
_458713____0302
_458714____0302
_458722____0302
_458726____0302
_458914____0302
_458918____0302
_458919____0302
_458923____0817B
_465078____0854B
_465143____0209
_465306____0203
_465327____0225
_465841____0832B
_465844____0601
_470001____0827B
_470004____0827B
_470008____0832B
_470009____0832B
_470013____0225
_470053____0832B
_470054____0832B
_470058____0230
_470059____0230
_470059____0800B
_470060____0811B
_470069____0820B
_470073____0823B
_470076____0820B
_470077____0820B
_470096____0811B
_470097____0811B
_470101____0230
_470106____0832B
_470109____0817B
_470114____0817B
_470115____0811B
_470147____0811B
_470150____0837B
_470174____0832B
_470182____0820B
_470183____0827B
_470185____0832B
_470186____0832B
_470187____0832B
_470204____0832B
_470208____0832B
_470217____0832B
_470219____0225
_470226____0230
_470238____0225
_470266____0827B
_471064____0103
_471074____0115
_471076____0102
_472231____0606
_473022____0312
_473176____0201
_473204____0312
_473256____1407
_473257____1407
_473258____1407
_473259____1407
_474149____0601
_474170____0108
_474171____0108
_474172____0108
_476004____0115
_476009____0105
_476024____0109
_476025____0109
_476026____0109
_476037____0105
_476038____0105
_476039____0105
_476040____0608
_476056____0103
_476060____0103
_476062____0115
_510141____1204
_510487____1207
_510516____1002
_510518____1002
_510568____1801
_510569____1801
_510717____1004
_510718____1004
_510719____1004
_510720____1004
_510721____1004
_510722____1004
_510746____1307A
_510774____0606
_510934____1006
_511652____1005
_511653____1005
_511654____1005
_511678____1004
_511679____1004
_512709____0608
_512709____1001
_512709____2321
_512770____1104
_512770____1112
_513201____1812
_513266____1101
_513536x1__0312
_513666____0601
_514466____0627
_515701____1716
_515708____0731
_516196____0601
_516199____0601
_517152____1108
_518431____1204
_518771____0302
_518792____0302
_518858____0302
_518875____0302
_519116____1409
_519175____0902
_519180____1310A
_519246____0615
_519379____1102
_519383____1102
_519409____AC1-A
_519419p___AC1-B
_519483____1203
_519533____0854B
_519637____1107
_519690____0302
_519699____0302
_519708____0302
_519846____0732
_519858____1110
_519864____AC1-A
_520086____0731
_520285____0622
_520411____1310A
_521374____0307
_521431____0725
_521434____0725
_521456____0729
_521457____0729
_521458____0729
_521566____1101
_521738____1116
_521825____1006
_522022____0731
_522051____0900
_522052____0900
_522053____0900
_522054____0900
_522161____0729
_522202____1310A
_522293p___2310
_522673____1801
_522774____1310A
_522777____1801
_522966____0632
_523117____1801
_523614____1107
_523821____0307
_523918____1104
_523924____1104
_523925____1104
_523928____1104
_524031____1101
_524083____1310A
_524184____0902
_524227____1204
_524230____1204
_524757____1310A
_524831____1801
_524832____1801
_524833____1801
_524853____AC1-A
_524972____1803
_524972____1805
_525001____1209
_525002____1209
_525003____1209
_525004____1209
_525005____1209
_525006____1209
_525007____1209
_525013____1209
_525031____1104
_525035____1204
_525266____0308
_525341____0725
_525342____0725
_525343____0725
_525344____0725
_525345____0729
_525441x11_AC1-B
_525441x4__AC1-B
_525441x6__AC1-B
_525547____AC1-A
_525560____0308
_525931____2317A
_526114____0732
_526124____1510
_526125____1510
_526154____1107
_526184____1107
_526249____1510
_526347____0403
_526369____1716
_526370____1716
_526382x1__AC1-A
_526382x18_AC1-A
_526383x7__AC1-B
_526459____0402
_526460____0402
_526460____0403
_526485____0403
_526486____0403
_526600x1__AC1-D
_526600x2__0621
_526600x2__1309B
_526600X3__0731
_526600x3__1720
_526600x4__0617
_526600x4__AC49
_526600x6__AC1-A
_526633____1105
_526646____1402
_526765____1204
_526830____1510
_526944____0901
_527024____0900
_527136____0103
_527171____1005
_527303____0601
_527330____0601
_527332____0601
_527337____0601
_527350____AC1-A
_527353x1__0601

NUMERICAL INDEX

_527353x2__0601
_527353x3__0601
_527432____1006
_527485____0608
_527974____1801
_527977____1207
_527981____1202
_527987____1518
_529050____1202
_529168____1520
_529169____1520
_529237____1209
_529239____1209
_529248____1207
_529281____1204
_529301____0312
_529332____1507
_529391____1205
_529392____1205
_529401____1716
_529479____0731
_529527____0206
_530096____0116
_530097____AC1-B
_530129____1110
_530186____1107
_530202____1207
_530202____1312A
_530202____1312B
_530203____1207
_530204____1207
_530262____0625
_530314____0731
_530314____2320G
_530314____2327
_530353____1116
_530366____0204
_530366____1108
_530421____0902
_530426____1209
_530431x3__1518
_530431x4__1518
_530431x5__1518
_530496____1005
_530569____1005
_530570____1001
_530573____1002
_530600____1001
_530690____0303
_530702____1004
_530703____1004
_530705____1004
_530706____1002
_530907____1302A
_530914____1302A
_530916____1302A
_531013____1107
_531016____0902
_531074____0608
_531075____1801
_531087p___AC1-A
_531089____0102
_531089____1310A
_531090____0102
_531090____1310A
_531094____1601
_531149____1306B
_531150x1__1306B
_531150x2__1306B
_531150x3__1306B
_531150x4__1306B
_531156____1005
_531190____1204
_531192____1204
_531215____1507
_531435____0850B
_531470____0504
_531476____1104
_531510____1104
_531511____1104
_531546____AC1-A
_531581____0307
_531846____1310A
_531877____1104
_531895____1801
_531916____1501
_531933____0303
_531951____1501
_531980____1202
_531981____1202
_531986____1105
_532009____0902
_532015____0307
_532016____0307
_532017____0504
_532064____0307
_532076____1522
_532077____1522
_532108____1505
_532109____1505
_532118p___1521
_532164p___0622
_532181____1204
_532182____1204
_532183____1204
_532184____1204
_532187____1204
_532188____1204
_532190____1204
_532191____1205
_532201____1310A
_532252____1105
_532273____1306A
_532406____1521
_532407____1521
_532433p___AC1-B
_532449____1305A
_532453____0602
_532453____2317A
_532473____1302A
_532531____1110
_532532____1110
_532537p___1305A
_532545____0756
_532545____0850B
_532547____0756
_532548____0756
_532549____0756
_532549____0850B
_532550____0756
_532550____0850B
_532551____0756
_532551____0850B
_532553p___0759
_532554____0759
_532568____1105
_532582____1302A
_532606____AC12B
_532607p___AC12B
_532609____1107
_532641____1107
_532654____1107
_532665____1001
_532666____1110
_532668____1110
_532669____1110
_532674____1107
_532759____0627
_532760____0627
_532762____1107
_532853____0602
_532855____0731
_532855____1721
_532857____1716
_532871____AC1-A
_532878____0756
_532879____0759
_532880____AC1-A
_532885p___1305A
_532886____0756
_532886____0850B
_532888____1310A
_532902____1310A
_532906____AC1-B
_532990____0625
_532994p___1305A
_532994p___1305B
_532996p___0756
_532996p___0850B
_533056____1102
_533057____1102
_533065____1110
_533098____0627
_533154____1105
_533161____1002
_533163____1204
_533164____1204
_533195p___1507
_533251____1304B
_533263____1304B
_533264____1304B
_533265____1304B
_533266____1304B
_533268p___1305B
_533271____0850B
_533275p___0759
_533290____1110
_533308x5__AC1-A
_533308x6__AC1-A
_533314____0627
_533327____1310A
_533328____0759
_533329____0850B
_533342____1305A
_533342____1305B
_533343x3__0756
_533343x3__0850B
_533379____1304B
_533441____1310A
_533462____1310A
_533463____1310A
_533465____1310A
_533468____1310A
_533472____AC12B
_533473____AC12B
_533483p___1305B
_533519____0621
_533520____0621
_533522____0621
_533523____0621
_533565____0632
_533570____0303
_533583____0621
_533697____0621
_533698____0621
_533699____0621
_533756____AC49
_533761____AC49
_533762____1203
_533763____1203
_533764____1204
_533765____1204
_533766____1310A
_533782x3__1310A
_533788p___AC1-B
_533888____1203
_533901____1402
_533907____1102
_533981____AC1-A
_534011____AC12C
_534012w___AC12C
_534013____AC12C
_534014____AC12C
_534015____AC12C
_534016____AC12C
_534017____AC12C
_534019____AC12C
_534084____1409
_534092p___0756
_534093p___0850B
_534094____0756
_534096____0756
_534127____1409
_534135____1310A

NUMERICAL INDEX

_534227____1305A
_534241____1805
_534284p___1110
_534296____1309B
_534306____1301A
_534312____1304A
_534341____0506
_534348____1307B
_534384____1110
_534397____0632
_534411____0756
_534416____1312B
_534442____1305B
_534451____1310A
_534512____1305B
_534513____1305B
_534515____1409
_534534____1309B
_534566____AC47
_534567____AC47
_534600____1302B
_534602____1302B
_534603____1304B
_534604____1304B
_534606____1302B
_534608____1304B
_534609____1302B
_534610____1302B
_534612____1304B
_534613____1302B
_534615____1306B
_534616____1306B
_534617____1306B
_534619____1304B
_534624____1304B
_534625____1304B
_534627____1308B
_534628____1308B
_534629____1308B
_534631____1308B
_534632____1308B
_534634____1308B
_534635____1308B
_534637____1308B
_534638____1308B
_534639____1308B
_534640____1308B
_534641____1308B
_534642____1308B
_534643____1308B
_534644____1308B
_534645____1302B
_534645____1308B
_534646x1__1308B
_534646x2__1308B
_534646x3__1308B
_534647____1302B
_534650____1302B
_534651____1302B
_534652____1302B
_534653____1302B
_534655____1302B
_534656____1302B
_534660____1308B
_534661____1308B
_534663____1308B
_534664____1308B
_534665____1302B
_534667____1309B
_534669____1309B
_534670____1309B
_534674____1309B
_534675____1309B
_534679____1309B
_534681____1309B
_534682____1309B
_534683____1309B
_534686____1309B
_534687____1309B
_534688____1309B
_534691____1309B
_534692____1309B
_534694____1309B
_534699____1309B
_534701____1309B
_534702____1309B
_534703____1309B
_534704____1309B
_534705____1309B
_534706____1309B
_534707____1309B
_534709____1309B
_534710____1308B
_534710____1309B
_534712____1309B
_534715____1309B
_534725____AC1-A
_534726____1309B
_534833____0206
_534858____1304B
_534866____0731
_534872____0206
_534880____1309B
_534882____1309B
_534901____1109
_535065____1302B
_535074____1309B
_535108____1110
_535117____0312
_535146____1101
_535147____1101
_535148____1101
_535157____1101
_535158____1101
_535159____1101
_535160____1101
_535162____1101
_535164____1101
_535166____1101
_535167____1101
_535168____1101
_535171____1103
_535176____1103
_535177____1101
_535178____1102
_535182____1102
_535183____1102
_535189____1108
_535190____1101
_535191____1101
_535278____1116
_535284____0841B
_535307____1116
_535311____0731
_535323p___1116
_535324____1116
_535325____1116
_535326____1116
_535391____1005
_535436____0756
_535461____0900
_535482____1103
_535512____1309B
_535514____1116
_535527____1309B
_535552____AC49
_535558____1103
_535559____1103
_535561____AC47
_535565____1304B
_535585____1103
_535586____1103
_535716____1309B
_535733____1522
_535966____1309B
_536005w___1805
_536100p___1805
_536101p___1805
_536102p___1805
_536103p___1805
_536125____0602
_536126w___0602
_536139____0602
_536141____1108
_536147____0204
_536350w___0615
_536350w___2349B
_536350w___AC1-A
_536350w___AC1-B
_536369____1108
_536378____1108
_536378____1108
_536379____1104
_536380____1109
_536385____0205
_536398____1801
_536399____1801
_536432____0403
_536457____0620
_536458____0620
_536459____0620
_536495____1005
_536513____1518
_536516____1518
_536517____1518
_536521____1108
_536523p___1112
_536528p___1107
_536547____1101
_536564____1107
_536565____1107
_536568____1107
_536569____1107
_536599____0603
_536604x2__1112
_536621____0403
_536622____1108
_536628____0731
_536630____0731
_536652____1107
_536684____1107
_536701____1402
_536720____0303
_536733____1101
_536734____0625
_536743____0204
_536756____2327
_536757____1518
_536795____0116
_536795____0627
_536795____2320G
_536828____1610
_536840____1107
_536846____AC1-B
_536858____1701
_536859____1701
_536951____0301
_536956____1112
_536960____1112
_536962____1112
_536967____1112
_536970____1112
_536971____1112
_536973____1112
_536976____1112
_536977____1112
_536980____1112
_536981____1112
_536982____1112
_536983____1112
_536984____1112
_536985____1112
_536987____1112
_536988____1112
_536989____1112
_536990____1112
_536992____1112
_536993____1112
_536994____1112
_536995____1112
_536996____1112
_536997____1112
_536998____1112
_537002____1112

NUMERICAL INDEX

_537003____1112
_537122____0302
_537123____0302
_537124____0302
_537125____0302
_537126____0302
_537127____0302
_537131____0302
_537132____0302
_537136____0302
_537137____0302
_537139____0302
_537140____0302
_537141____0302
_537143____0302
_537145____0302
_537147____0302
_537149____0302
_537150____0302
_537151____0302
_537153____0302
_537154____0302
_537155____0302
_537157____0302
_537160____0302
_537161____0302
_537162____0302
_537163____0302
_537164____0302
_537165____0302
_537166____0302
_537167____0302
_537168____0302
_537169____0302
_537170____0302
_537171____0302
_537172____0302
_537173____0302
_537175____0302
_537176____0302
_537177____0302
_537178____0302
_537179____0302
_537180____0302
_537181____0302
_537182____0302
_537183____0302
_537187____0302
_537188____0302
_537189____0302
_537190____0302
_537191____0302
_537192____0302
_537193____0302
_537194____0302
_537195____0302
_537198____0302
_537199____0302
_537239____1112
_537288____0204
_537288____1108
_537337____AC12C
_537338____AC12C
_537460____AC1-A
_537461____1204
_537530____1112
_537540p___1402
_537542____1110
_537589____1707
_537634____1005
_537669x1__0732
_537669x2__0732
_537671____0731
_537672____0731
_537673____0732
_537674____0732
_537678____1005
_537712____1801
_537714____1801
_537759____0602
_537874____1701
_537876____1005
_537926____1112
_537927____1112
_537928____1112
_537930____1112
_537933____1112
_537938____1112
_538011____0303
_539921____AC12B
_543659____1308B
_565165____1101
_630451____1002
_630651____1306A
_631469____0312
_636747____1103
_636765____1103
_636965____1203
_637401____0302
_637402____0302
_637410____0302
_639040____1209
_639053____0608
_639055____0608
_644151____0302
_644152____0302
_644929____0302
_644936____0302
_644938____0302
_644966____0302
_644969____0302
_652860____1305A
_652860____1305B
_653033p___2327
_653073____2327
_653518____0307
_663428____1103
_663429____1103
_664443____0902
_666768____0625
_666858____0615
_672811____0615
_673029____0302
_673031____0302
_674869____0725
_674899____1522
_675058____1112
_675466____1107
_675721____1112
_677372____1112
_677373____1112
_677375____1112
_677377____1112
_677384____1112
_677390____1112
_677410____1112
_677412____1112
_677416____1112
_677417____1112
_677418____1112
_677419____1112
_677420____1112
_677421____1112
_677422____1112
_677423____1112
_677433____1112
_677442____1112
_677453____1112
_677456____1112
_677460____1112
_677489____1112
_678134____1112
_679055____1112
_679093____0205
_679093____1108
_679257____1306A
_679713____1112
_679832____0625
_679927____1104
_679955____0625
_680210____1302A
_680264____1112
_680445____0206
_681328____1302B
_681642____0702
_681705____0701
_681950____1112
_683647____1112
_683870____0625
_684881____0747
_905833____0601
_908616____0302
_908914____0308
_911882x2__1304B
_911882x8__1204
1312010p___1620
1312028____2317A
1312029____2320G
1312029____2327
1312030____0502
1312031____0502
1312038____1620
1312055____2330
1312079____1601
1312082____2310
1312083p___1601
1312088w___0617
1312090____1620
1312142____2317A
1312143____2317A
1312170____2325
1312185____1620
1312187____2360B
1312189____0502
1312192____1620
1312194____1620
1312195____1620
1312210____2349C
1312213____2320H
1312250____2320G
1312260____2317A
1312261____2317A
1312286p___1601
1312310____2330
1312320____2349B
1312324____2320G
1312338p___1601
1312339p___1601
1312340p___2313
1312348____1622
1312349____1622
1312352____2330
1312353____2330
1312380____0619
1312382P___2347B
1312384____2349C
1312439w___2330
1312459____2349C
1312471____2349C
1312475____0502
1312478____2360C
1312492x1__2327
1312492x4__2327
1312492x5__2327
1312492x7__2327
1312492x8__2327
1312493x1__2327
1312493x4__2327
1312493x5__2327
1312493x7__2327
1312493x8__2327
1312496x1__2327
1312496x4__2327
1312496x5__2327
1312496x7__2327
1312496x8__2327
1312502____1601
1312503____1601
1312516____1604
1312517____1604
1312518____2310
1312519____2310
1312531____2325
1312534____1601

NUMERICAL INDEX

1312535____1601
1312538____1604
1312539____1604
1312541____2304
1312554____2330
1312563p___2303
1312572p___1604
1312573p___1604
1312576wp__1604
1312577wp__1604
1312583____2325
1312586____1604
1312587____1604
1312640x1__2317B
1312643x1__2320F
1312643x1__2324E
1312646____2317B
1312646____2320F
1312646____2324E
1312647____2317B
1312647____2320F
1312647____2324E
1312669____1622
1312692wp__1604
1312693wp__1604
1312694____0619
1312708____2360G
1312709____2360G
1312817____1413
1312825____1610
1312826____1620
1312832____2330
1312838____2349C
1312854____2313
1312856____2313
1312857____2313
1312864____0618
1312867____0618
1312868____0618
1312869____0618
1312875____2313
1312880____2313
1312884____1604
1312885____1604
1312886____1604
1312899____2330
1312906____2320H
1312907____AC30
1312917x2__2351
1312918x2__2351
1312919p___2313
1312921p___2313
1312923____1701
1312924p___2313
1312928p___1604
1312929p___1604
1312932p___1604
1312933p___1604
1312946____2313
1312947____2313
1312959____2320H
1312969p___0610
1312971p___0610
1312972p____0610
1312973p____0610
1312975____2320H
1313113____2323B
1313134____2323B
1313135____2323B
1313246x1__2330
1313248____2327
1313262____2347B
1313263____2347B
1313284____2360A
1313285____2360A
1313299x1__2309
1313299x2__2309
1313299x3__2309
1313299x4__2309
1313299x5__2309
1313299x6__2309
1313299x7__2309
1313299x8__2309
1313354x1__2309
1313354x2__2309
1313354x3__2309
1313354x4__2309
1313354x5__2309
1313354x6__2309
1313354x7__2309
1313354x8__2309
1313419x1__2360J
1313419x2__2360J
1313419x3__2360J
1313419x4__2360J
1313419x5__2360J
1313419x6__2360J
1313419x7__2360J
1313419x8__2360J
1313425X1__2360A
1313426X1__2360A
1313427X1__2360A
1313428X1__2360A
1313425X2__2360A
1313426X2__2360A
1313427X2__2360A
1313428X2__2360A
1313425X3__2360A
1313426X3__2360A
1313427X3__2360A
1313428X3__2360A
1313425X4__2360A
1313426X4__2360A
1313427X4__2360A
1313428X4__2360A
1313425X5__2360A
1313426X5__2360A
1313427X5__2360A
1313428X5__2360A
1313860p___2309
1313861p___2309
1313990x2__2344
1313990x3__2344
1313990x4__2344
1313990x5__2344
1313990x6__2344
1313991x2__2344
1313991x3__2344
1313991x4__2344
1313991x5__2344
1313991x6__2344
1314001____2327
1314030____2327
1314031____2327
1314040x1__2327
1314055____2327
1314089p___1620
1314092p___2327
1314093p___2327
1314101p___2327
1314115____1622
1314139____2327
1314142____2327
1314144____2320G
1314144____2327
1314152p___1622
1314155____1622
1314156____1622
1314162____2327
1314163____2327
1314164p___1601
1314170____2327
1314176x1__2327
1314176x4__2327
1314176x5__2327
1314176x6__2327
1314176x8__2327
1314177x1__2327
1314177x4__2327
1314177x5__2327
1314177x6__2327
1314177x8__2327
1314192____2327
1314193____2327
1314194____2327
1314195____2327
1314300w___1601
1314307____0502
1314309____2330
1314319p___2310
1314346____2317C
1314347____2317C
1314352____2320E
1314353____2320E
1314358____2324D
1314359____2324D
1314376____1620
1314382____0619
1314383____0619
1314442____2360E
1314443____2360E
1314452p___1601
1314453p___1601
1314456p___1601
1314457p___1601
1314460____2338
1314461____2313
1314462____2313
1314463____2313
1314464____2313
1314465____2313
1314466____2313
1314476____2313
1314478x4__2313A
1314479____0502
1314489____AC13A
1314646____2313
1314668____2316A
1314669____2316A
1314676p___1604
1314710____1601
1314710____1604
1314710____2304
1314713____1601
1314744____1601
1314744____2330
1314745____0610
1314747____1620
1314757____0617
1314758____0617
1314759____0617
1314765v___2330
1314765w___2330
1314773v___2330
1314773w___2330
1314792____1601
1314793____1601
1314795____1601
1314795____1604
1314798____1604
1314799____1604
1314802____2349B
1314803____2349B
1314806w___1601
1314810____2349B
1314822____AC13A
1314832____2313
1314833p___1622
1314902____2317A
1314903____2317A
1314960p___0617
1314962____0617
1314983____2349C
1314984____2349C
1314986vp__2313
1315216x1__2313
1316126P___2347B
1316127P___2347B
1316190p___1604
1316492x30_2341B
1316492x31_2341B
1316492x32_2341B
1316492x33_2341B
1316498x30_2341C

NUMERICAL INDEX

1316498x31_2341C
1316498x32_2341C
1316498x33_2341C
1321106____2304
1323188p___1601
1323189p___1601
1539025____1409
1539026____1407
1539027____1408
1539032w___1807
1539033w___1807
1539037____1812
1539040p___1803
1539041p___1803
1539042p___1803
1539043____1501
1539053____1209
1539064____0101
1539065____1310A
1539068____0101
1539069____0101
1539084____0507
1539087____0507
1539088____1500
1539094____0501
1539095____0501
1539099____0102
1539105____0731
1539165____1812
1539167____1812
1539168____0620
1539366____1501
1539404____0109
1539422____0206
1539426____0206
1539428____0206
1539432____0206
1539433____0206
1539446____0206
1539448____0206
1539451____0608
1539455____1402
1539459____1402
1539460____1402
1539461____1402
1539462____1402
1539463____1402
1539464____1402
1539484____1518
1539486____1518
1539487____1518
1539527____1801
1539543____1801
1539589w___1803
1539595____0731
1539596____0625
1539601____0747
1539603____0747
1539726____0312
1539729____0700
1539732____0102
1539735____1310A
1539737____0811B
1539738____0811B
1539768____1107
1539769____0850B
1539770____1107
1539771____1107
1539779____1107
1539781____0621
1539783____1107
1539794____0403
1539822p___1305A
1539823p___1305B
1539825____0850B
1539830____0850B
1539832____0850B
1539833____0850B
1539845____0854B
1539850____0854B
1539851____0854B
1539852____0854B
1539856____0402
1539857____0402
1539870____1308B
1539876____0102
1539877____1709
1539878____1707
1539879____1714
1539880____1713
1539881____1720
1539882____1721
1539884____1716
1539885____1716
1539894____1312B
1539896____0401
1539897____0401
1539912____1309B
1539916____1701
1539920____1002
1539954____0312
1539957____0312
1539958____0312
1539966____0312
1539967____0312
1539975____0841B
1540007____0841B
1540008____0841B
1540009____0841B
1540012____1116
1540024____AC14
1540025____AC14
1540026____AC14
1540032wp__AC1-A
1540033____AC1-A
1540067____0630
1540076____0630
1540085____0625
1540087____0625
1540088____AC1-A
1540090____AC1-A
1540092____AC1-A
1540092____AC1-B
1540093____AC1-A
1540098____AC1-B
1540100____AC1-B
1540103____1309B
1540117____1716
1540118____1707
1540118____1709
1540119____2313
1540121____1720
1540123____1720
1540124____1720
1540126____1721
1540127____1112
1540132____2313
1540135____0615
1540136____0615
1540137____2349B
1540139____1309B
1540140____AC1-A
1540142____AC1-A
1540150____1309B
1540152____0625
1540153____0625
1540157____0625
1540158____0625
1540179____0760
1540182____0731
1540183____1312A
1540187____0308
1540189____0621
1540196____0732
1540201____0307
1540207____0760
1540209____0760
1540211____0760
1540225____0206
1540226____0206
1540227____0205
1540231____0205
1540232____0627
1540242____1718
1540263____0307
1540269____1701
1540270____0627
1540283____AC1-A
1540284____AC1-B
1540287____0627
1540288____2349B
1540292____AC1-A
1540293____0627
1540294____0506
1540306____0621
1540308____0853B
1540309____0853B
1540311____0621
1540321____1721
1540327____0632
1540346____AC12A
1540347____AC12A
1540350____AC12A
1540351____AC12A
1540353____AC12A
1540354____AC12A
1540360____AC12A
1540361____AC12A
1540368____AC12A
1540369____AC12A
1540370____AC12A
1540398____AC49
1540400____AC49
1540401____AC49
1540409____AC49
1540414____AC49
1540417____AC49
1540418____AC49
1540419____AC49
1540420____AC49
1540421____AC49
1540431____0303
1540508____1521
1540509____0206
1540512____AC12B
1540513____AC12B
1540514____AC12B
1540527____1309B
1540528____AC12A
1540563____0627
1540623____1112
1540626____1112
1540628____1112
1540629____1112
1540637____1112
1540640____1112
1540641____1112
1540647____1310A
1540658____0620
1540671____1112
1540674____1112
1540676____AC13B
1540683____0621
1540715____AC12A
1540721____AC12A
1540723____0633
1540739____AC1-A
1540742____AC1-A
1540745____AC1-B
1540746____AC1-B
1540747____0633
1540748____0633
1540749____0633
1540750____0633
1540752____1305A
1540752____1305B
1540754____0608
1540755____0608
1540756____0608
1540757____0608
1540761____0608
1540762____0608
1540763____0608
1540764____0608

NUMERICAL INDEX

1540765____0608
1540766____0608
1540811____0705
1540812____0702
1540815____0701
1540818____0720
1540819____0721
1540820____0721
1540821____0721
1540822____0701
1540823____0703
1540825____0608
1540834____1002
1540835____1002
1540836____0627
1540837____0627
1540838____0731
1540839____0627
1540841____0633
1540842____0633
1540843____0633
1540844____0633
1540845____0633
1540846____0633
1540847____0633
1541089____0705
1541294____1309B
1541296____1309B
1541298____1309B
1541299____1309B
1541300____1309B
1541302____1309B
1541303____1309B
1541304____1309B
1541305____1309B
1541306____1309B
1541307____1309B
1541308____1309B
1541309____1309B
1541310____1309B
1541311____1309B
1541312____1309B
1541313____1309B
1541314____1309B
1541315____1309B
1541316____1309B
1541317____1309B
1541318____1309B
1541319____1309B
1541322____1107
1541323____1000
1541325____1000
1541326____1000
1541327____1000
1541328____1000
1541329____1000
1541330____1000
1541385____1720
1541400____1309B
1541402____1307A
1541403____1309B
1541404____1309B
1541412____1107
1541423____0854B
1541448____0901
1541451____0901
1541458____0732
1541459____0732
1541478____1107
1541479____1803
1541582____0632
1541584____0632
1541631____0633
1541662____0701
1541674____AC14
1541700____1204
1541728____1112
1541746____0900
1541769____1803
1541839____1501
1541843____1112
1541928____1112
1541930____1107
1541931____1107
1541932____1107
1541933____1107
1541934____1107
1541976____1301B
1541983____AC1-A
1542138p___0506
1542177____AC1-A
1542978____1501
1543223____1203
1543223____1407
1543368____1112
1543369____1112
1543617____AC12B
1543772____AC12B
1543773____AC12B
1544035____1204
1544036____1204
1544122____1112
1544394____1112
1544413____1112
1546065____0610
1546683____1101
1546684____1101
1546685____1101
1546686____1101
1546755____AC45
1546756____AC45
1546774____1101
1546775____1101
1547892____0731
1654149____1601
1685390____0627
6202056____0854B
6232159____0854B
6240743____0103
6300063____0105
6302404____0203
6302440____0202
6302481____0206
6403546____0203
6403713____0608
6421081____1716
6440470____0103
6440471____0103
6450518____1716
6470117____0820B
6470118____0820B
6470203____0811B
6470205____0230
6470206____0832B
6470207____0832B
6470244____0828B
6470245____0820B
6470246____0827B
6470248____0837B
6470257____0827B
6470270____0814B
6470271____0814B
6470272____0814B
6470273____0814B
6470274____0814B
6470275____0814B
6470303____0823B
6470308____0225
6470309____0225
6470310____0225
6470312____0225
6470318____0225
6470320____0225
6470321____0225
6470322____0225
6470323____0225
6470324____0225
6470325____0225
6470326____0225
6470331____0225
6470337____0820B
6470338____0225
6470339____0817B
6479085____0220
6479112____0814B
6479113____0225
6479191____0225
6480049____0814B
6480070____0225
6480123____0824B
6480143____0820B
6480147____0602
6480151____0832B
6480195____0312
6480211____0109
6480356____0832B
6480358____0832B
6480390____0103
6480391____0103
6480392____0103
6480393____0103
6480394____0103
6480407____0102
6480408____0832B
6480467____0832B
6480506____0302
6480507____0116
6480508____0116
6480512____0308
6480519____0106
6480529____0847B
6480543____0102
6480544____0102
6480546____0102
6480561____0104
6480602____0115
6480610____0103
6480640____0817B
6480641____0820B
6480649____0827B
6480655____0811B
6480716____0817B
6480718____0832B
6480731____0832B
6480732____0832B
6480749____0811B
6480750____0837B
6480751____0601
6480754____0832B
6480755____0102
6480795____0832B
6480797____0225
6480799____0832B
6480800____0832B
6480802____0832B
6480807____0103
6480808____0832B
6480810____0225
6480826____0830B
6480849____0312
6480917____0104
6480918____0104
6480955____0115
6480965____0832B
6484020____0108
6484021____0108
6484022____0108
6484023____0108
6484036____0301
6484038____0301
6484039____0301
6484040____0304
6484041____0304
6484042____0304
6484043____0304
6484044____0304
6484045____0225
6484046____0820B
6484116____0100
6484153____0800B
6484155____0302
6484156____0302
6484157____0302
6484158____0302

NUMERICAL INDEX
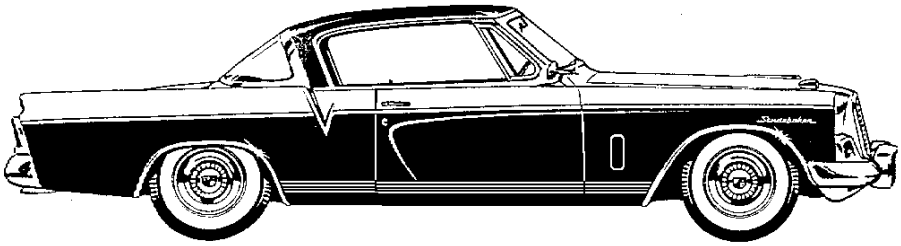
6484159____0302
6484160____0302
6484161____0302
6484162____0302
6484163____0302
6484164____0302
6484165____0302
6484166____0302
6484167____0302
6484168____0302
6484169____0302
6484170____0302
6484173____0302
6484178____0606
6484179____0606
6484180____0606
6484181____0606
6484185____0607
6484186____0607
6484187____0606
6484191____0606
6484192____0607
6484193____0606
6484194____0606
6484195____0606
6484196____0606
6484212____0607
6484245____0601
6484246____0601
6484247____0601
6484248____0601
6484249____0601
6484250____0601
6484251____0601
6484252____0601
6484331____0817B
6484396____0103
6484523____0823B
6484524____0823B
6484549____0302
6484550____0302
6484554____0603
6484556____0102
6484567____0302
6484600____0302
6484606____0601
6484609____0601
6484611____0601
6484612____0601
6484677____0108
6484678____0108
6484679____0108
6484680____0108
6489039____0828B
6489048____0103
6489127____0103
6489200____0103
6489292____0824B
6489322____0225
6489367____0823B
6489368____0823B
6489377____0603
6489378____0603
6489467____0225
6489478____0832B
6489482____0828B
6489485____0220
6489495____0101
6489609____0827B
6489627____0830B
6489628____0312
6489720____0118
6489723____0118
6489724____0104
6489834____0601
6489917____0603
6489942____0832B
6492077____0103